2018 MULE SX™ 4x4 SE

PARTS DIAGRAM

Taillight(s)

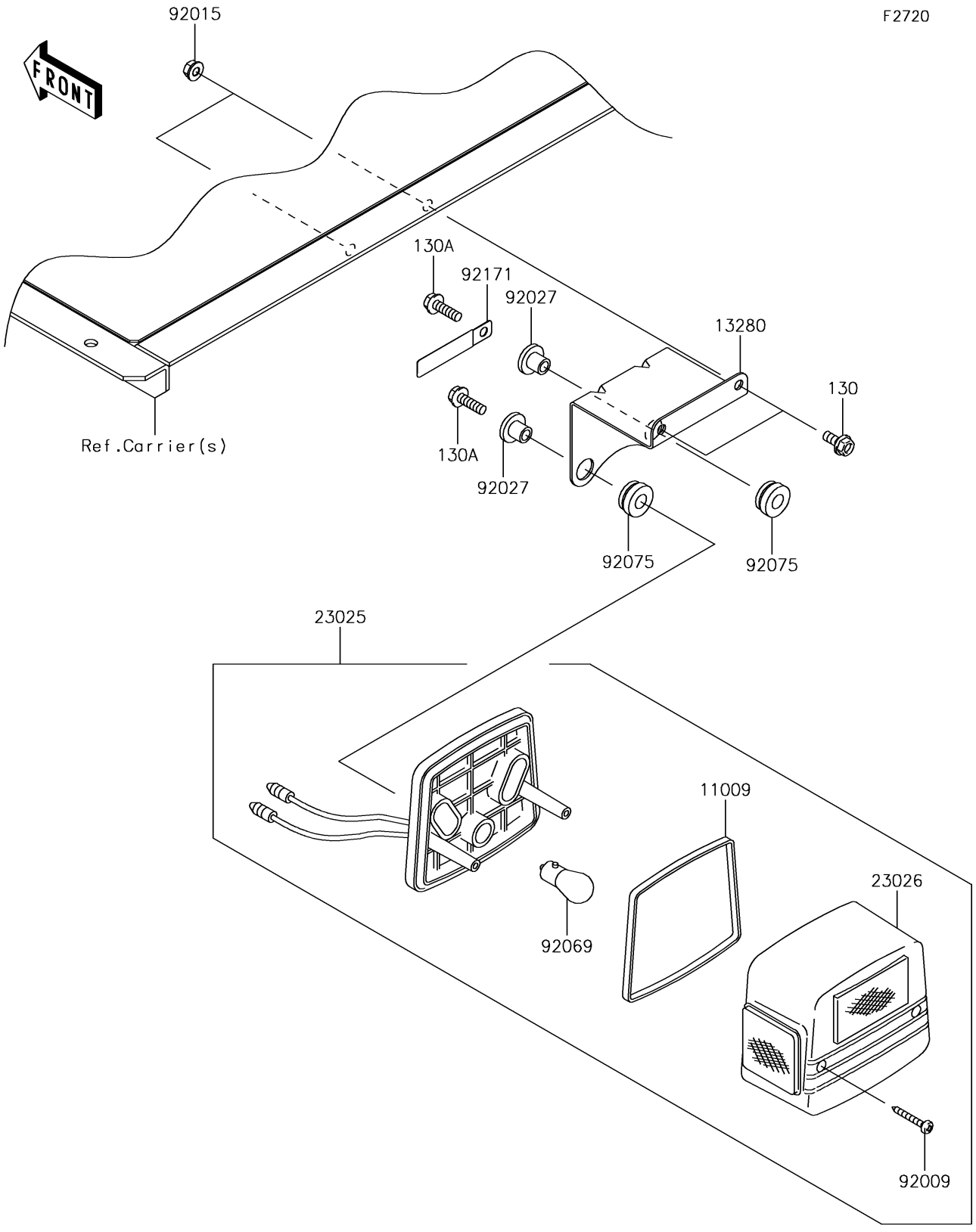

© 2026 Kawasaki Motors Corp., U.S.A.

2018 MULE SX™ 4x4 SE

PARTS LIST

Taillight(s)

ITEM NAME	PART NUMBER	QUANTITY
GASKET,TAIL LAMP (Ref # 11009)	11009-1215	1
HOLDER,TAIL LAMP (Ref # 13280)	13280-0079	1
LAMP-TAIL (Ref # 23025)	23025-1042	1
LENS,TAIL LAMP (Ref # 23026)	23026-1019	1
SCREW,TAPPING,4X25 (Ref # 92009)	92009-1069	2
NUT,FLANGED,6MM (Ref # 92015)	92015-1367	2
COLLAR,L=11.1 (Ref # 92027)	92027-194	2
BULB,12V 21/5W (Ref # 92069)	92069-1011	1
DAMPER (Ref # 92075)	92075-277	2
CLAMP,L=60 (Ref # 92171)	92171-0652	1
BOLT-FLANGED,6X14 (Ref # 130)	130BA0614	2
BOLT-FLANGED,6X20 (Ref # 130A)	130BA0620	2

© 2026 Kawasaki Motors Corp., U.S.A.