2017 MULE SX™ 4x4 XC CAMO

PARTS DIAGRAM

Drive Converter

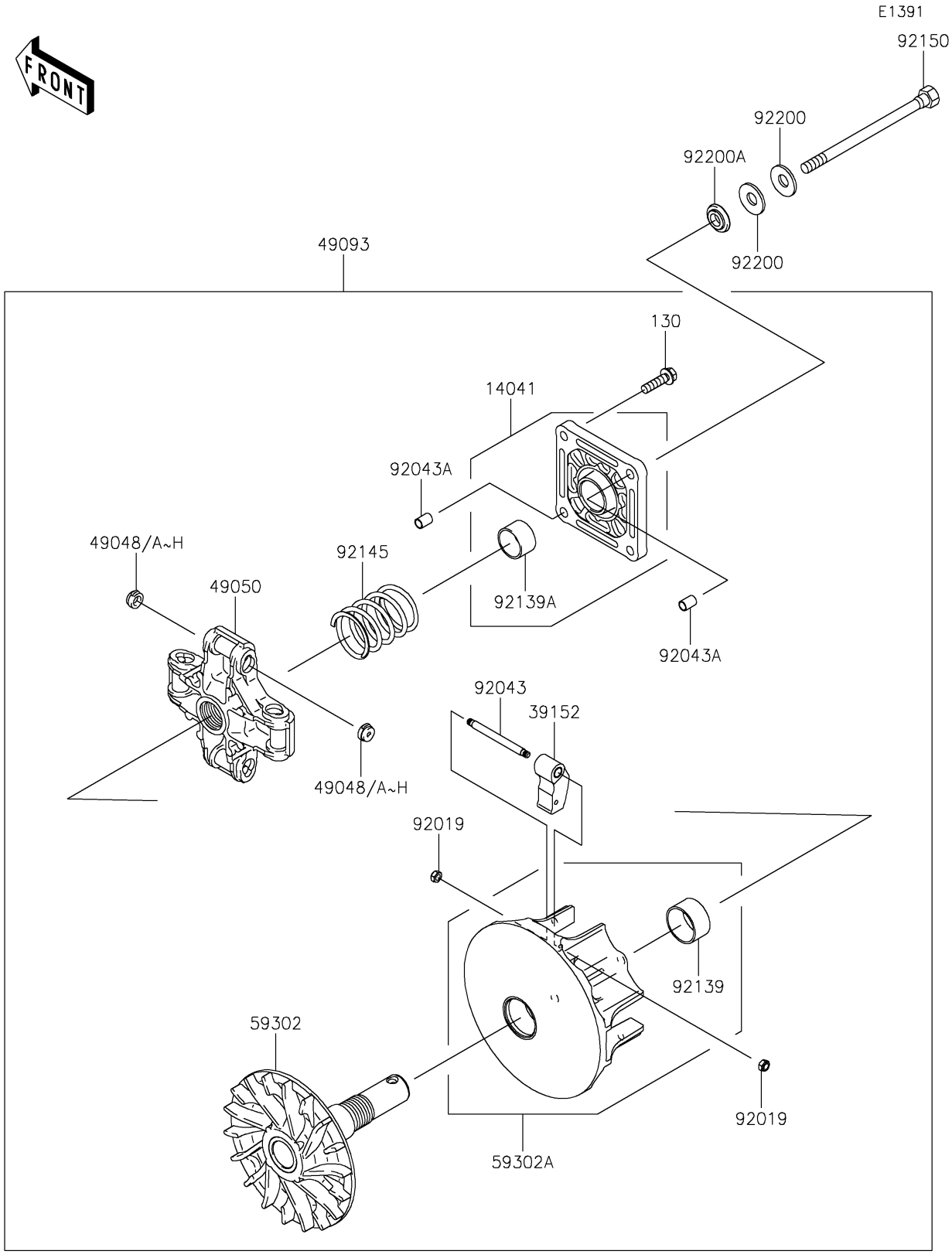

© 2026 Kawasaki Motors Corp., U.S.A.

2017 MULE SX™ 4x4 XC CAMO

PARTS LIST

Drive Converter

ITEM NAME	PART NUMBER	QUANTITY

© 2026 Kawasaki Motors Corp., U.S.A.