2017 MULE SX™ 4x4 XC

PARTS DIAGRAM

Shock Absorber(s)

F2280

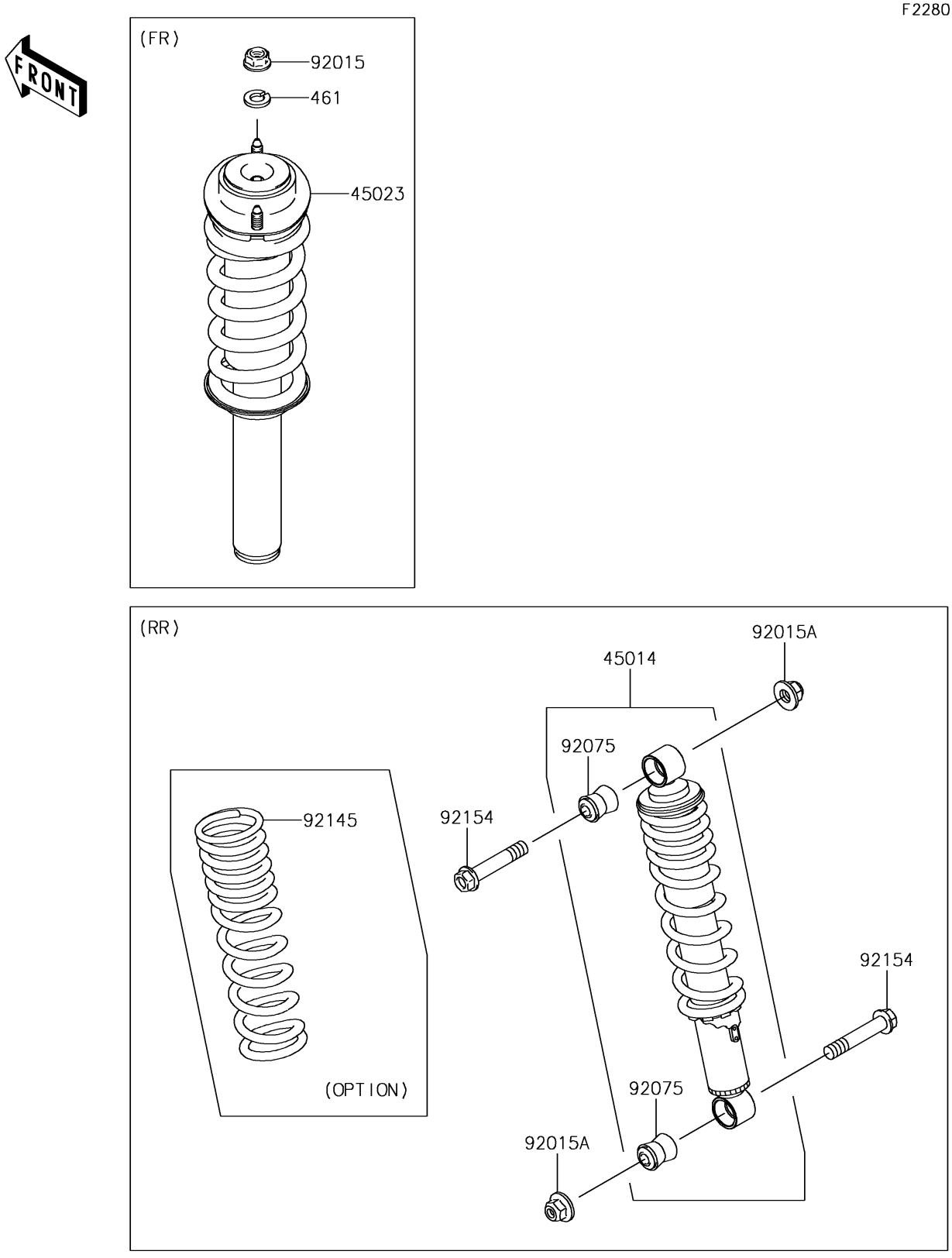

© 2026 Kawasaki Motors Corp., U.S.A.

2017 MULE SX™ 4x4 XC

PARTS LIST

Shock Absorber(s)

ITEM NAME	PART NUMBER	QUANTITY
SHOCKABSORBER (Ref # 45014)	45014-0539	2
STRUT (Ref # 45023)	45023-0009	2
NUT,FLANGED,10MM (Ref # 92015)	92015-1428	4
NUT,LOCK,10MM (Ref # 92015A)	92015-1597	4
DAMPER,SHOCKABSORBER (Ref # 92075)	92075-1784	4
SPRING,SHOCK,K=24.5/44.1N/MM (Ref # 92145)	92145-0400	2
BOLT,FLANGED,10X53.5 (Ref # 92154)	92154-1949	4
WASHER-SPRING,10MM (Ref # 461)	461DA1000	4

© 2026 Kawasaki Motors Corp., U.S.A.