2018 MULE SX™ 4x4 XC

PARTS DIAGRAM

Engine Mount

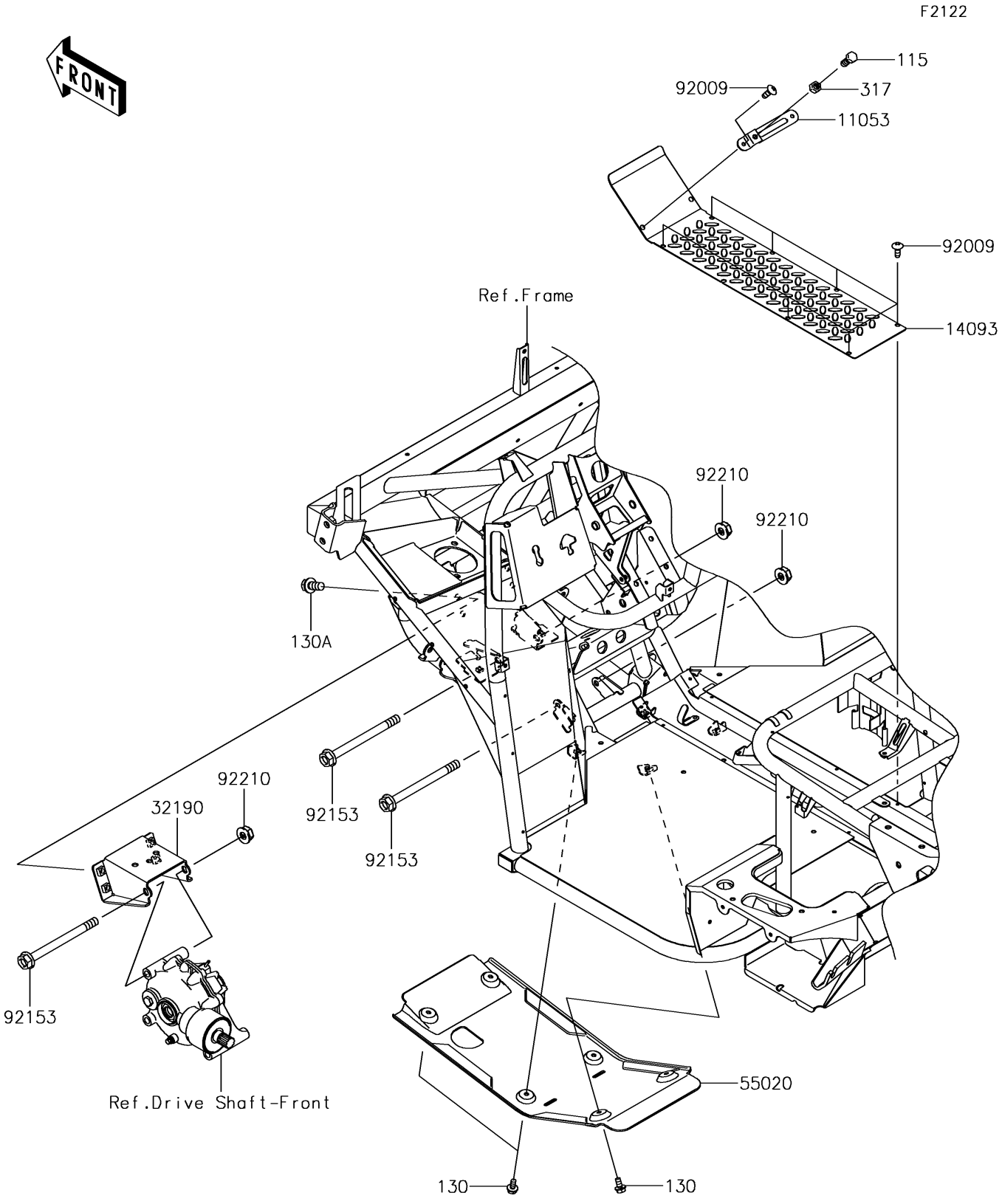

© 2026 Kawasaki Motors Corp., U.S.A.

2018 MULE SX™ 4x4 XC

PARTS LIST

Engine Mount

ITEM NAME	PART NUMBER	QUANTITY
BRACKET,THROTTLE LEVER (Ref # 11053)	11053-1670	1
COVER,FLOOR,CNT (Ref # 14093)	14093-0469	1
BRACKET-ENGINE (Ref # 32190)	32190-0639	1
GUARD,FRONT DIFF (Ref # 55020)	55020-0165	1
SCREW,TAPPING,6X16 (Ref # 92009)	92009-1166	9
BOLT,FLANGED,10X120 (Ref # 92153)	92153-7502	3
NUT,LOCK,FLANGED,10MM (Ref # 92210)	92210-0276	3
BOLT-SMALL-UPSET,8X20 (Ref # 115)	115BA0820	1
BOLT-FLANGED,6X12 (Ref # 130)	130BA0612	6
BOLT-FLANGED,10X20 (Ref # 130A)	130BA1020	4
NUT-HEX-SMALL,8MM (Ref # 317)	317BA0800	1

© 2026 Kawasaki Motors Corp., U.S.A.