2017 MULE SX™ 4x4 XC

PARTS DIAGRAM

Crankshaft/Piston(s)

E1320

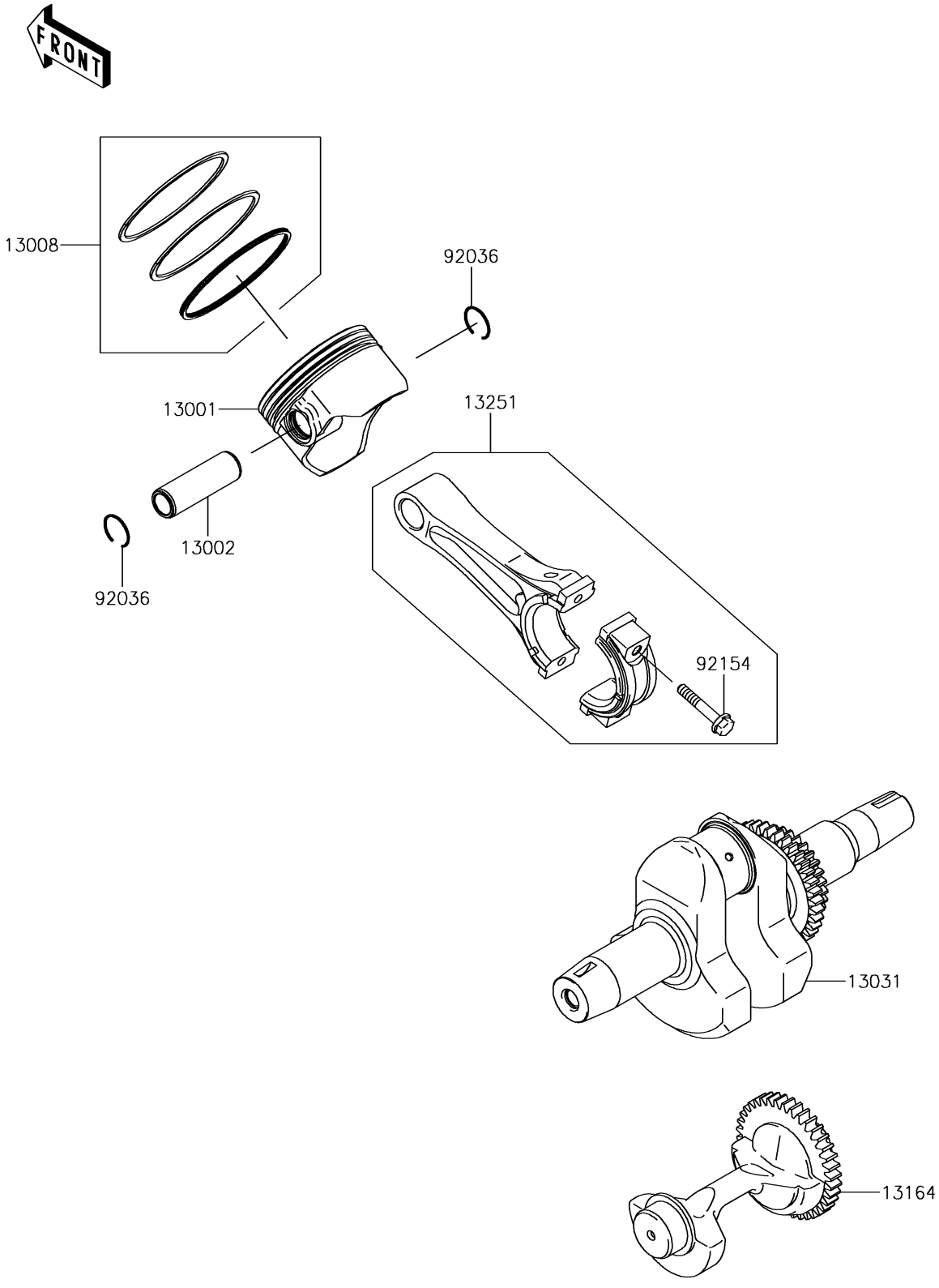

© 2026 Kawasaki Motors Corp., U.S.A.

2017 MULE SX™ 4x4 XC

PARTS LIST

Crankshaft/Piston(s)

ITEM NAME	PART NUMBER	QUANTITY
PISTON-ENGINE (Ref # 13001)	13001-7013	1
PIN-PISTON (Ref # 13002)	13002-7003	1
RING-SET-PISTON (Ref # 13008)	13008-6063	1
CRANKSHAFT-COMP (Ref # 13031)	13031-0760	1
BALANCER-COMP (Ref # 13164)	13164-0012	1
ROD-ASSY-CONNECTING (Ref # 13251)	13251-0049	1
RING-SNAP,PISTON PIN (Ref # 92036)	92036-008	2
BOLT,6X35 (Ref # 92154)	92154-2842	2

© 2026 Kawasaki Motors Corp., U.S.A.