2002 Police 1000

PARTS DIAGRAM

Crankshaft

E1321



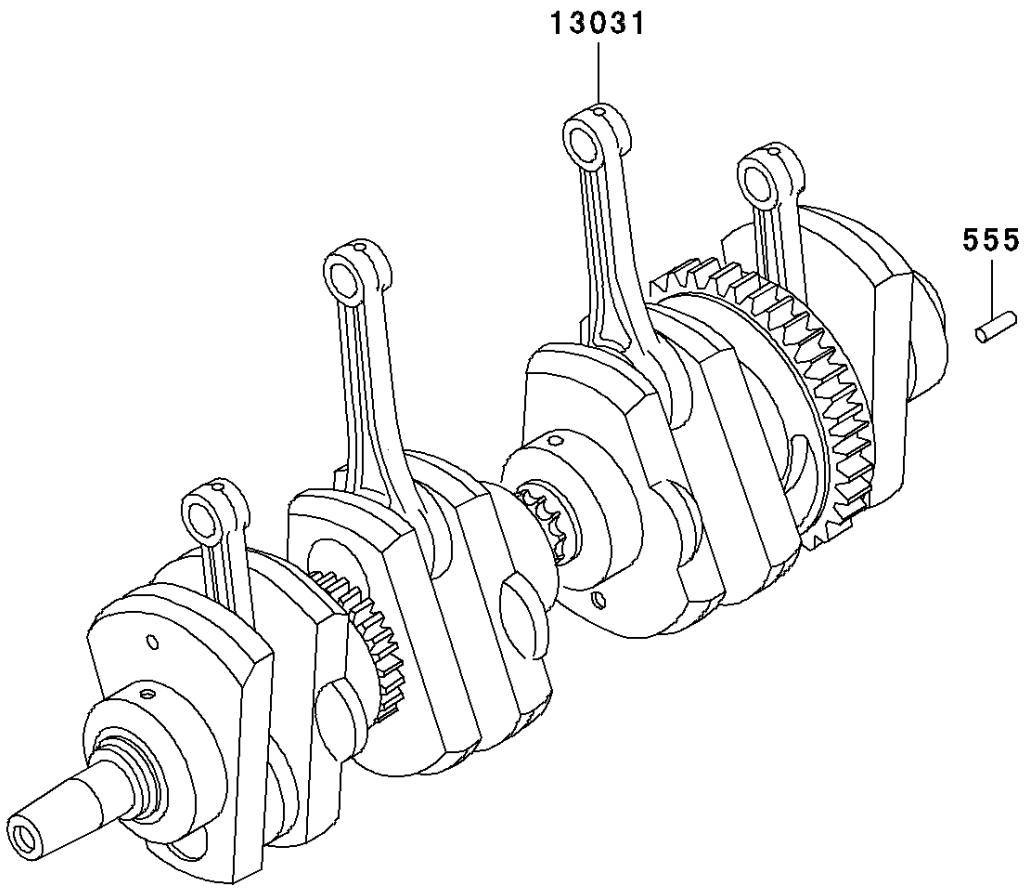

© 2026 Kawasaki Motors Corp., U.S.A.

2002 Police 1000

PARTS LIST

Crankshaft

ITEM NAME	PART NUMBER	QUANTITY
PIN-SPRING,4X8 (Ref # 555)	555A0408	1
CRANKSHAFT-COMP (Ref # 13031)	13031-1046	1

© 2026 Kawasaki Motors Corp., U.S.A.