2002 Police 1000

PARTS DIAGRAM

Cylinder Head

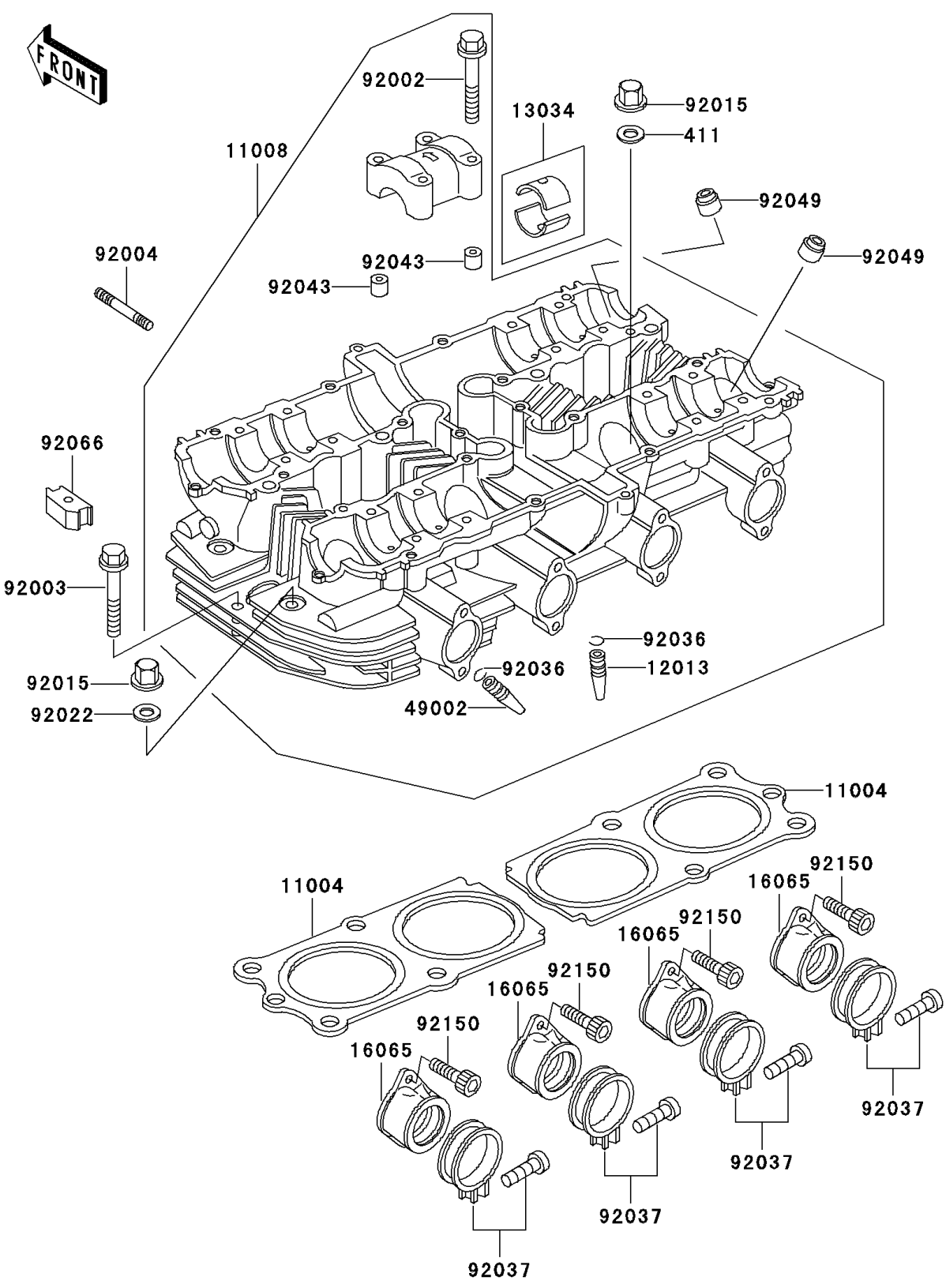

© 2026 Kawasaki Motors Corp., U.S.A.

2002 Police 1000

PARTS LIST

Cylinder Head

ITEM NAME	PART NUMBER	QUANTITY
WASHER-PLAIN,10MM (Ref # 411)	411B1000	8
GASKET-HEAD (Ref # 11004)	11004-1222	2
HEAD-COMP-CYLINDER,SILVER (Ref # 11008)	11008-1068	1
GUIDE-VALVE,INTAKE (Ref # 12013)	12013-009	4
BUSHING,CAMSHAFT (Ref # 13034)	13034-030	16
HOLDER-CARBURETOR (Ref # 16065)	16065-1135	4
GUIDE-VALVE,EXHAUST (Ref # 49002)	49002-1002	4
BOLT,6X45 (Ref # 92002)	92002-1300	16
BOLT,FLANGED,6X45 (Ref # 92003)	92003-092	2
STUD,8X30 (Ref # 92004)	92004-1121	8
NUT,FLANGED CAP,10MM (Ref # 92015)	92015-076	12
WASHER,10.5X22X1.6 (Ref # 92022)	92022-1005	4
RING-SNAP,VALVE GUIDE (Ref # 92036)	92036-023	8
CLAMP,ID=53,BLACK (Ref # 92037)	92037-1304	4
PIN,6.2X8X14 (Ref # 92043)	92043-1263	8
SEAL-OIL,RV37129.5 (Ref # 92049)	92049-016	8
PLUG,CYLINDER HEAD COVER (Ref # 92066)	92066-1552	4
BOLT,SOCKET,6X16 (Ref # 92150)	92150-1655	8

© 2026 Kawasaki Motors Corp., U.S.A.