2022 KLX®230

PARTS DIAGRAM

Headlight(s)

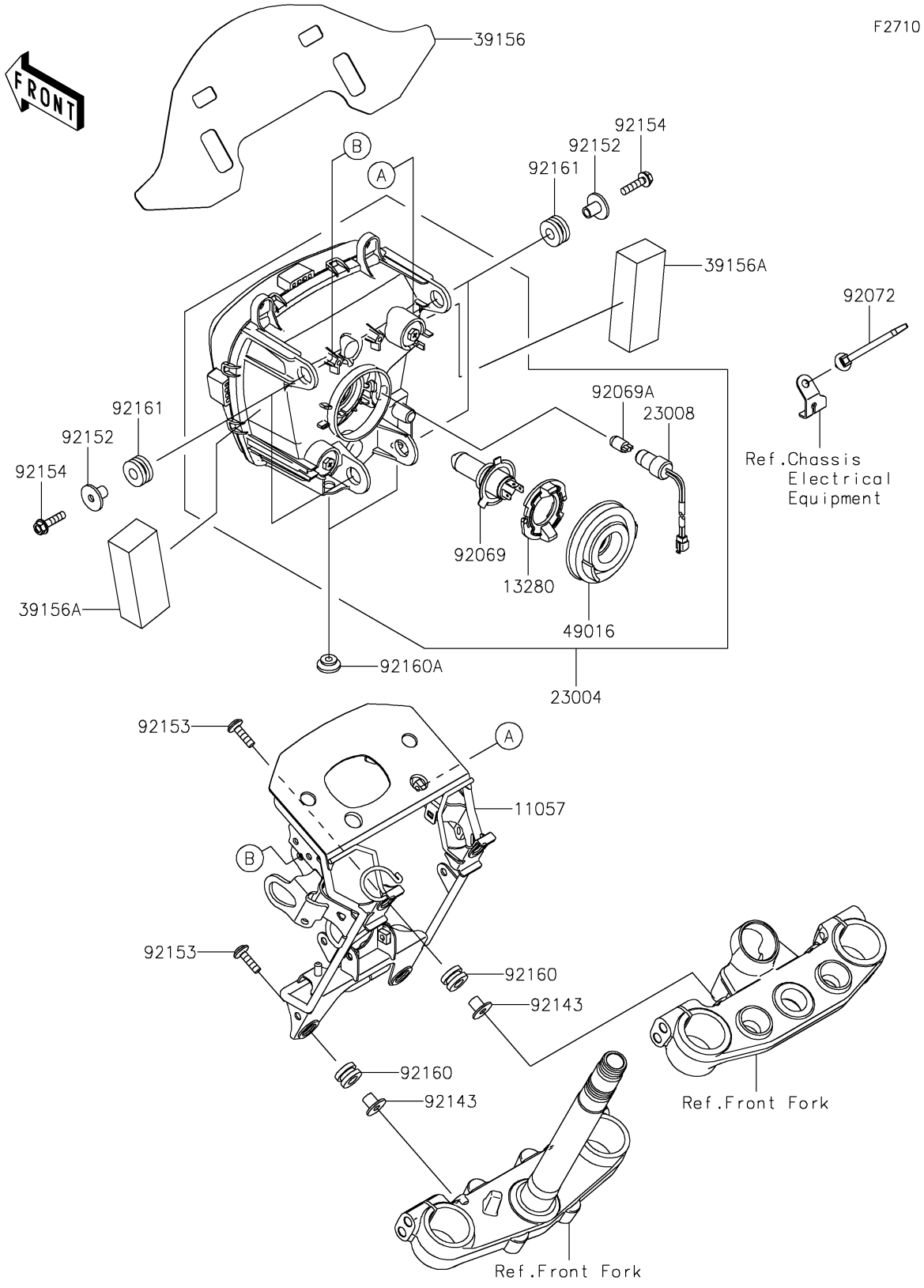

© 2026 Kawasaki Motors Corp., U.S.A.

2022 KLX®230

PARTS LIST

Headlight(s)

ITEM NAME	PART NUMBER	QUANTITY
BRACKET,HEAD LAMP (Ref # 11057)	11057-4020	1
HOLDER (Ref # 13280)	13280-0902	1
LAMP-HEAD (Ref # 23004)	23004-0415	1
SOCKET-ASSY,POSITION (Ref # 23008)	23008-0197	1
PAD (Ref # 39156)	39156-2564	1
PAD,90X25X35 (Ref # 39156A)	39156-2572	2
COVER-SEAL (Ref # 49016)	49016-0649	1
BULB,12V 60/55W,H4 (Ref # 92069)	92069-0097	1
BULB,12V 5W (Ref # 92069A)	92069-0098	1
BAND,OS170-FT7(BLACK) (Ref # 92072)	92072-1414	1
COLLAR (Ref # 92143)	92143-1353	4
COLLAR,6.5X10X15.3 (Ref # 92152)	92152-1793	4
BOLT,SOCKET,6X22 (Ref # 92153)	92153-0574	4
BOLT,FLANGED,6X25 (Ref # 92154)	92154-2774	4
DAMPER,10X20X12 (Ref # 92160)	92160-1167	4
DAMPER (Ref # 92160A)	92160-1613	2
DAMPER,10X24X12 (Ref # 92161)	92161-2112	4

© 2026 Kawasaki Motors Corp., U.S.A.