2022 NINJA® 650

PARTS DIAGRAM

Ignition Switch/Locks/Reflectors

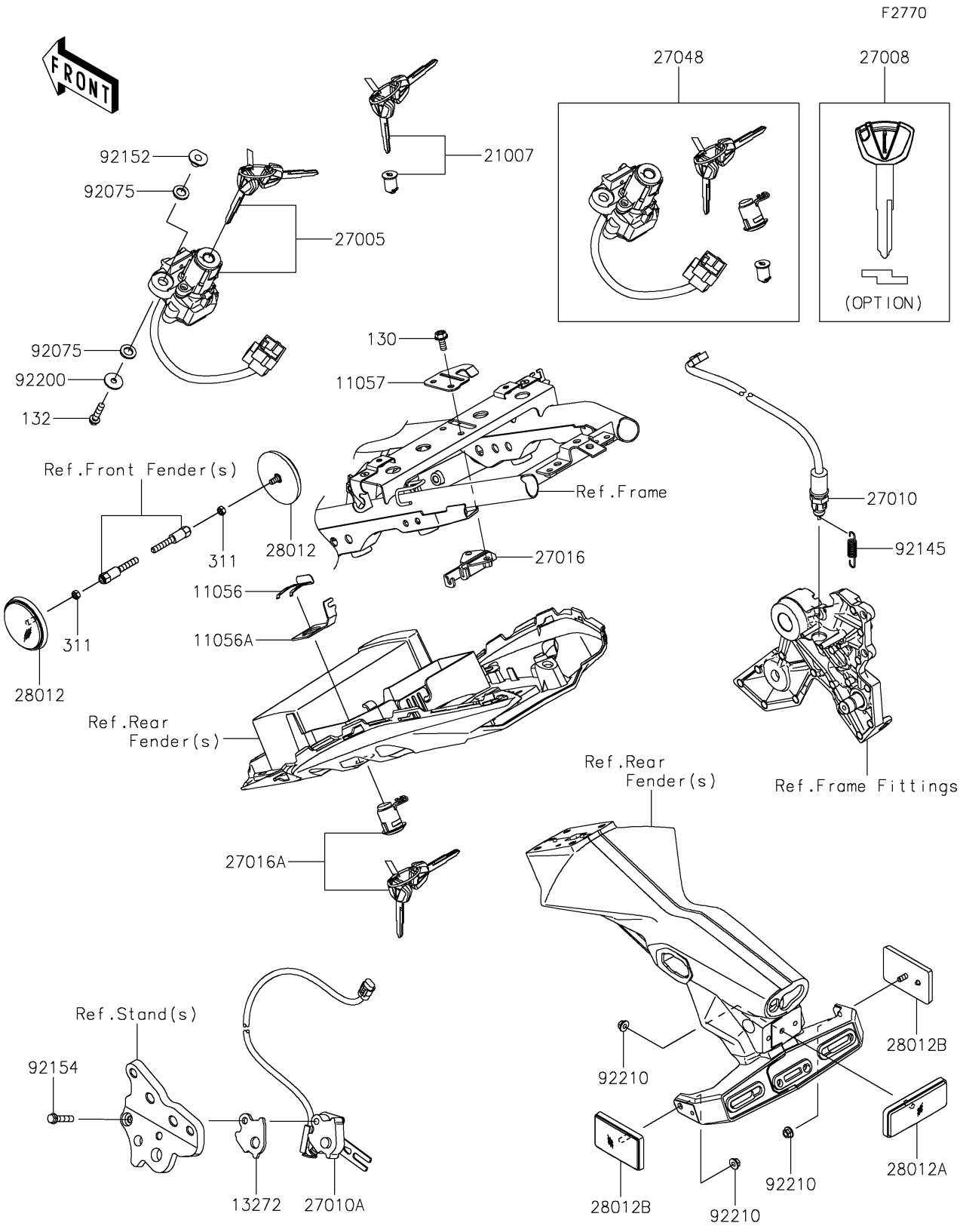

© 2026 Kawasaki Motors Corp., U.S.A.

2022 NINJA® 650

PARTS LIST

Ignition Switch/Locks/Reflectors

ITEM NAME	PART NUMBER	QUANTITY
BRACKET,CLASP (Ref # 11056)	11056-0238	1
BRACKET,SEAT LOCK (Ref # 11056A)	11056-2119	1
BRACKET,STRIKER (Ref # 11057)	11057-2812	1
PLATE (Ref # 13272)	13272-1330	1
ROTOR,LOCK,TANK CAP (Ref # 21007)	21007-5077	1
SWITCH-ASSY-IGNITION (Ref # 27005)	27005-0675	1
KEY-LOCK,BLANK (Ref # 27008)	27008-0596	1
SWITCH,BRAKE (Ref # 27010)	27010-0857	1
SWITCH,SIDE STAND (Ref # 27010A)	27010-0920	1
LOCK-ASSY,SEAT STRIKER (Ref # 27016)	27016-0008	1
LOCK-ASSY,SEAT (Ref # 27016A)	27016-5386	1
SWITCH-ASSY (Ref # 27048)	27048-5221	1
REFLECTOR-REFLEX,FR,SIDE (Ref # 28012)	28012-0001	2
REFLECTOR-REFLEX (Ref # 28012A)	28012-1077	1
REFLECTOR-REFLEX (Ref # 28012B)	28012-1088	2
DAMPER (Ref # 92075)	92075-1564	4
SPRING,REAR BRAKE (Ref # 92145)	92145-1896	1
COLLAR,6X9X10.6 (Ref # 92152)	92152-1971	2
BOLT,FLANGED,6X30 (Ref # 92154)	92154-1040	1
WASHER,6X20X1.6 (Ref # 92200)	92200-0780	2
NUT,FLANGED,5MM (Ref # 92210)	92210-0007	3
BOLT-FLANGED,6X14 (Ref # 130)	130BA0614	2
BOLT-FLANGED-SMALL,6X25 (Ref # 132)	132BA0625	2
NUT-HEX,5MM (Ref # 311)	311AB0500	2

© 2026 Kawasaki Motors Corp., U.S.A.