2022 NINJA® 650

PARTS DIAGRAM

Seat

F2510

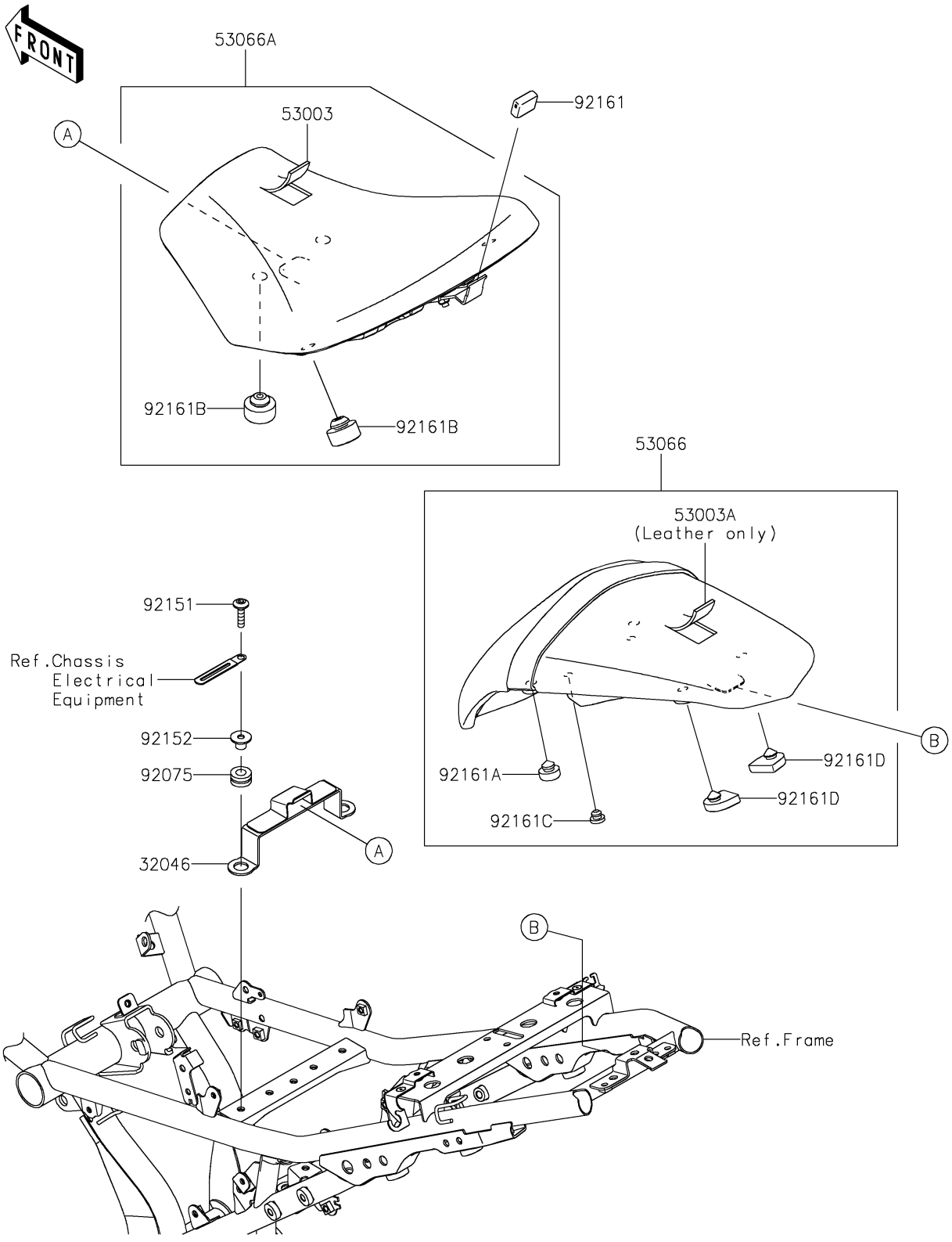

© 2026 Kawasaki Motors Corp., U.S.A.

2022 NINJA® 650

PARTS LIST

Seat

ITEM NAME	PART NUMBER	QUANTITY
BRACKET-SEAT (Ref # 32046)	32046-0394	1
LEATHER,FR SEAT,BLACK (Ref # 53003)	53003-0443-MA	1
LEATHER,RR,BLACK (Ref # 53003A)	53003-0505-MA	1
SEAT-ASSY,RR,BLACK+BLK (Ref # 53066)	53066-0662-12Y	1
SEAT-ASSY,FR,BLACK (Ref # 53066A)	53066-0690-MA	1
DAMPER (Ref # 92075)	92075-1880	2
BOLT,SOCKET,6X25 (Ref # 92151)	92151-1611	2
COLLAR,6.5X10X11.6 (Ref # 92152)	92152-2326	2
DAMPER,SEAT BRACKET,FR (Ref # 92161)	92161-1865	1
DAMPER,10X20X8 (Ref # 92161A)	92161-1898	2
DAMPER,14X30X14.5 (Ref # 92161B)	92161-1970	4
DAMPER (Ref # 92161C)	92161-1971	2
DAMPER (Ref # 92161D)	92161-2259	2

© 2026 Kawasaki Motors Corp., U.S.A.