2022 Z650

PARTS DIAGRAM

Rear Fender(s)

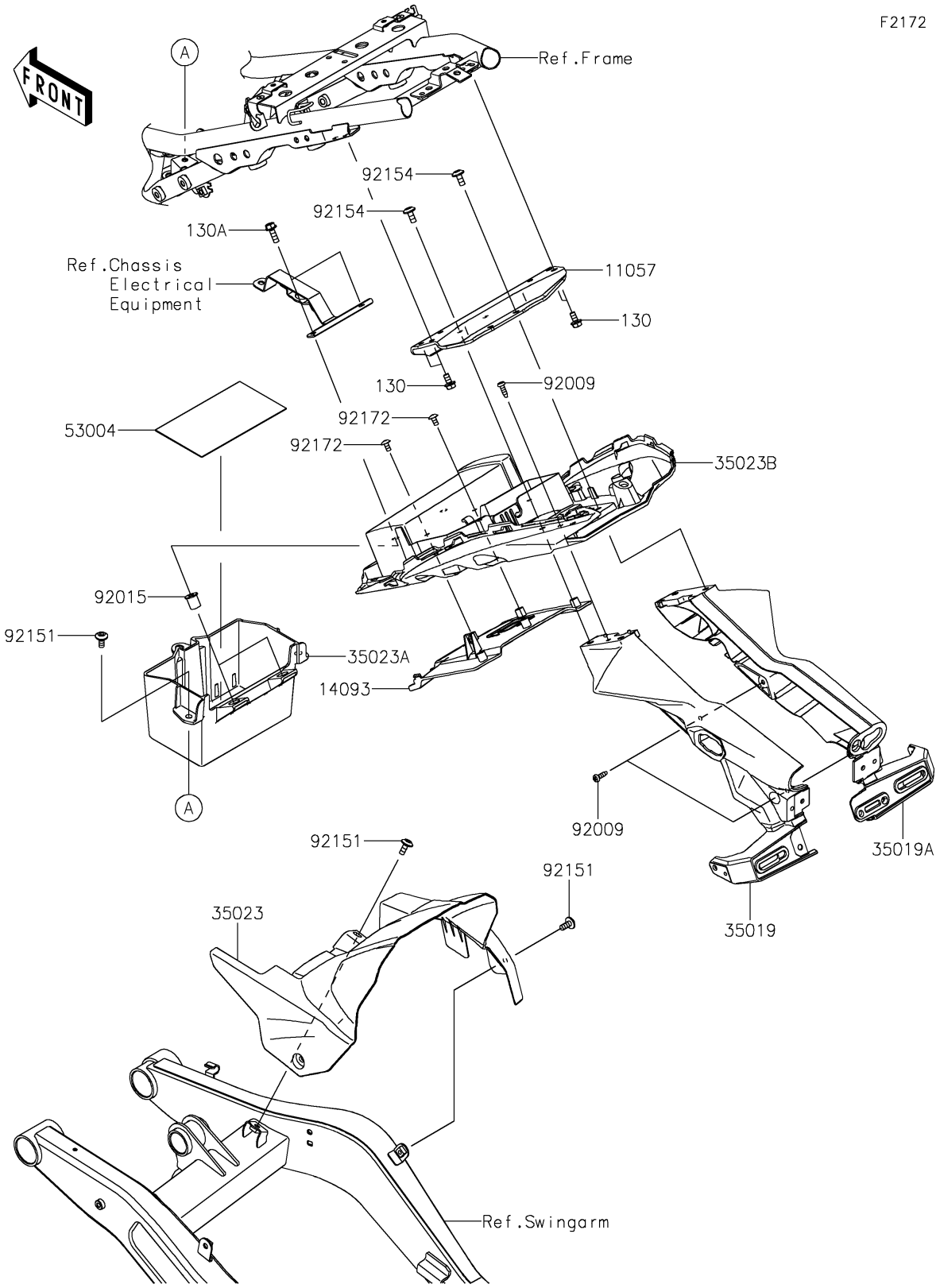

© 2026 Kawasaki Motors Corp., U.S.A.

2022 Z650

PARTS LIST

Rear Fender(s)

ITEM NAME	PART NUMBER	QUANTITY
BRACKET,FLAP (Ref # 11057)	11057-0757	1
COVER (Ref # 14093)	14093-0482	1
FLAP,LH (Ref # 35019)	35019-0671	1
FLAP,RH (Ref # 35019A)	35019-0672	1
FENDER-REAR (Ref # 35023)	35023-0417	1
FENDER-REAR,FR (Ref # 35023A)	35023-0418	1
FENDER-REAR,RR (Ref # 35023B)	35023-0419	1
MAT,BATTERY (Ref # 53004)	53004-0560	1
SCREW,TAPPING,5X16 (Ref # 92009)	92009-1984	3
NUT (Ref # 92015)	92015-1700	2
BOLT,SOCKET,6X14 (Ref # 92151)	92151-1654	4
BOLT,SOCKET,6X14 (Ref # 92154)	92154-0745	4
SCREW,5X10 (Ref # 92172)	92172-0864	5
BOLT-FLANGED,6X12 (Ref # 130)	130BA0612	4
BOLT-FLANGED,6X18 (Ref # 130A)	130BA0618	2

© 2026 Kawasaki Motors Corp., U.S.A.