2022 VULCAN® S

PARTS DIAGRAM

Decals(White)(CNFAN/CNFAL)

Kawasaki
Let the Good Times Roll®

F2861D

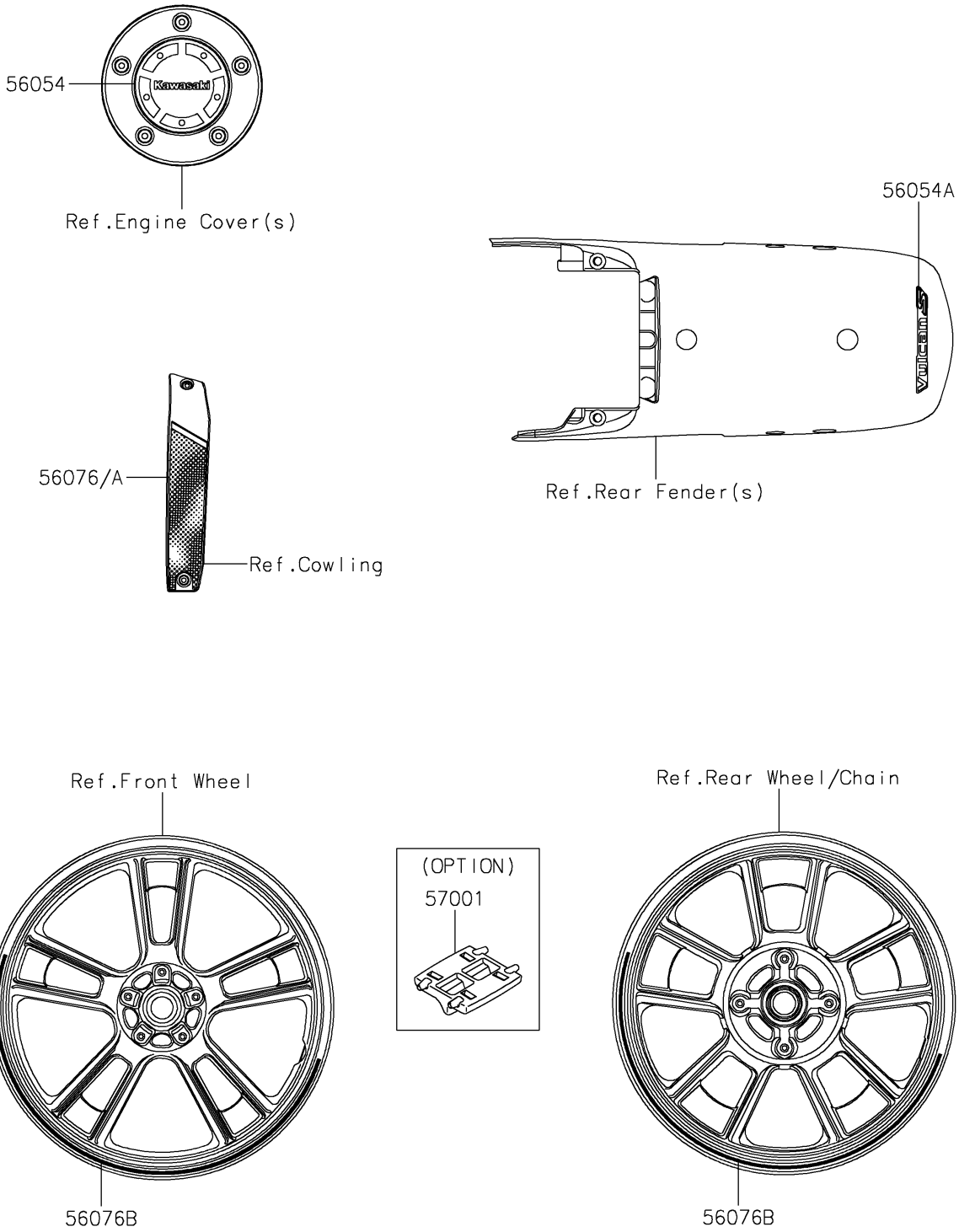

© 2026 Kawasaki Motors Corp., U.S.A.

2022 VULCAN® S

PARTS LIST

Decals(White)(CNFAN/CNFAL)

ITEM NAME	PART NUMBER	QUANTITY
MARK,CLUTCH COVER,KAWASAKI (Ref # 56054)	56054-1728	1
MARK,RR FENDER,VULCAN S (Ref # 56054A)	56054-2983	1
PATTERN,SHROUD COVER,LH (Ref # 56076)	56076-2903	1
PATTERN,SHROUD COVER,RH (Ref # 56076A)	56076-2904	1
PATTERN,WHEEL,GRN/WHT,6X656 (Ref # 56076B)	56076-2905	4
RIM STRIPE APPLICATOR (Ref # 57001)	57001-1752	AR

© 2026 Kawasaki Motors Corp., U.S.A.