# 2022 VULCAN® S

## PARTS DIAGRAM

### Tires

F2210

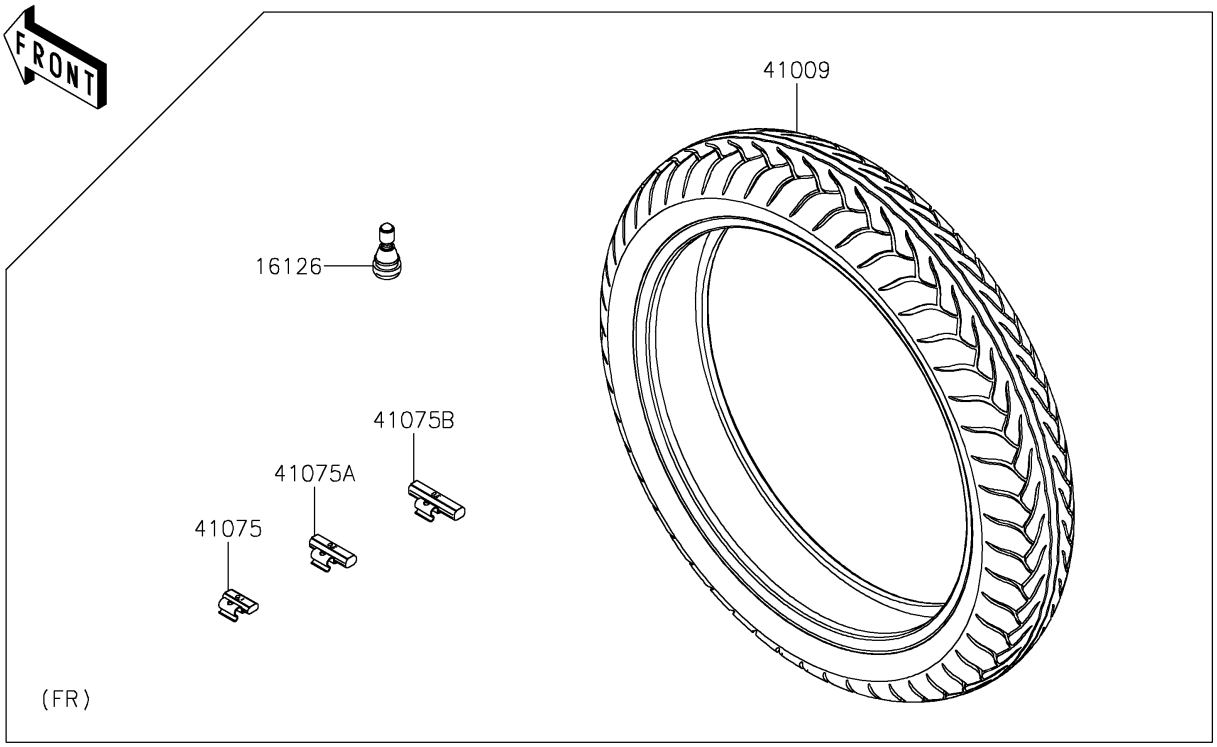


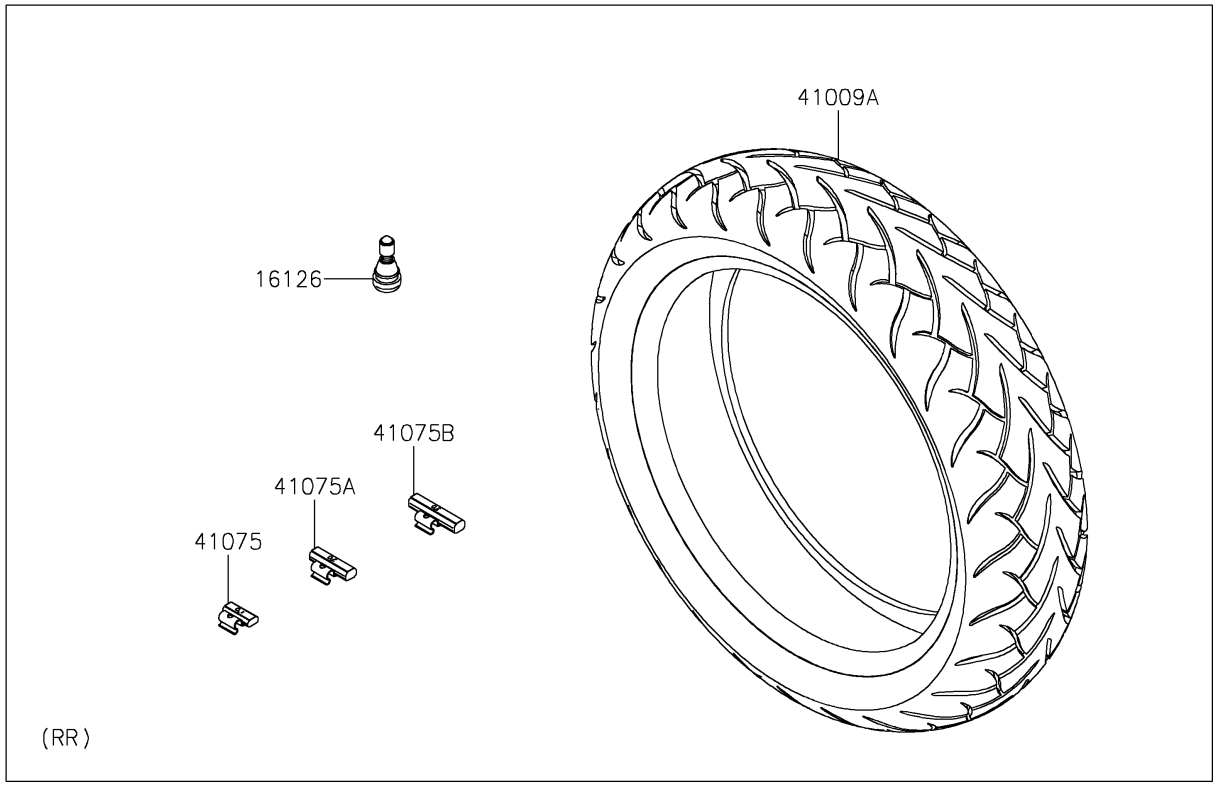


© 2026 Kawasaki Motors Corp., U.S.A.

# 2022 VULCAN® S

## PARTS LIST

### Tires

| ITEM NAME | PART NUMBER | QUANTITY |
|---|---|---|
| VALVE,TIRE (Ref # 16126) | 16126-1140 | 2 |
| TIRE,FR,120/70R18(59H),D220F (Ref # 41009) | 41009-0659 | 1 |
| TIRE,RR,160/60ZR17(69H),D220ST (Ref # 41009A) | 41009-0693 | 1 |
| BALANCER-WHEEL,10G,SILVER (Ref # 41075) | 41075-0007 | AR |
| BALANCER-WHEEL,20G,SILVER (Ref # 41075A) | 41075-0008 | AR |
| BALANCER-WHEEL,30G,SILVER (Ref # 41075B) | 41075-0009 | AR |

© 2026 Kawasaki Motors Corp., U.S.A.