2022 VULCAN® S

PARTS DIAGRAM

Suspension/Shock Absorber

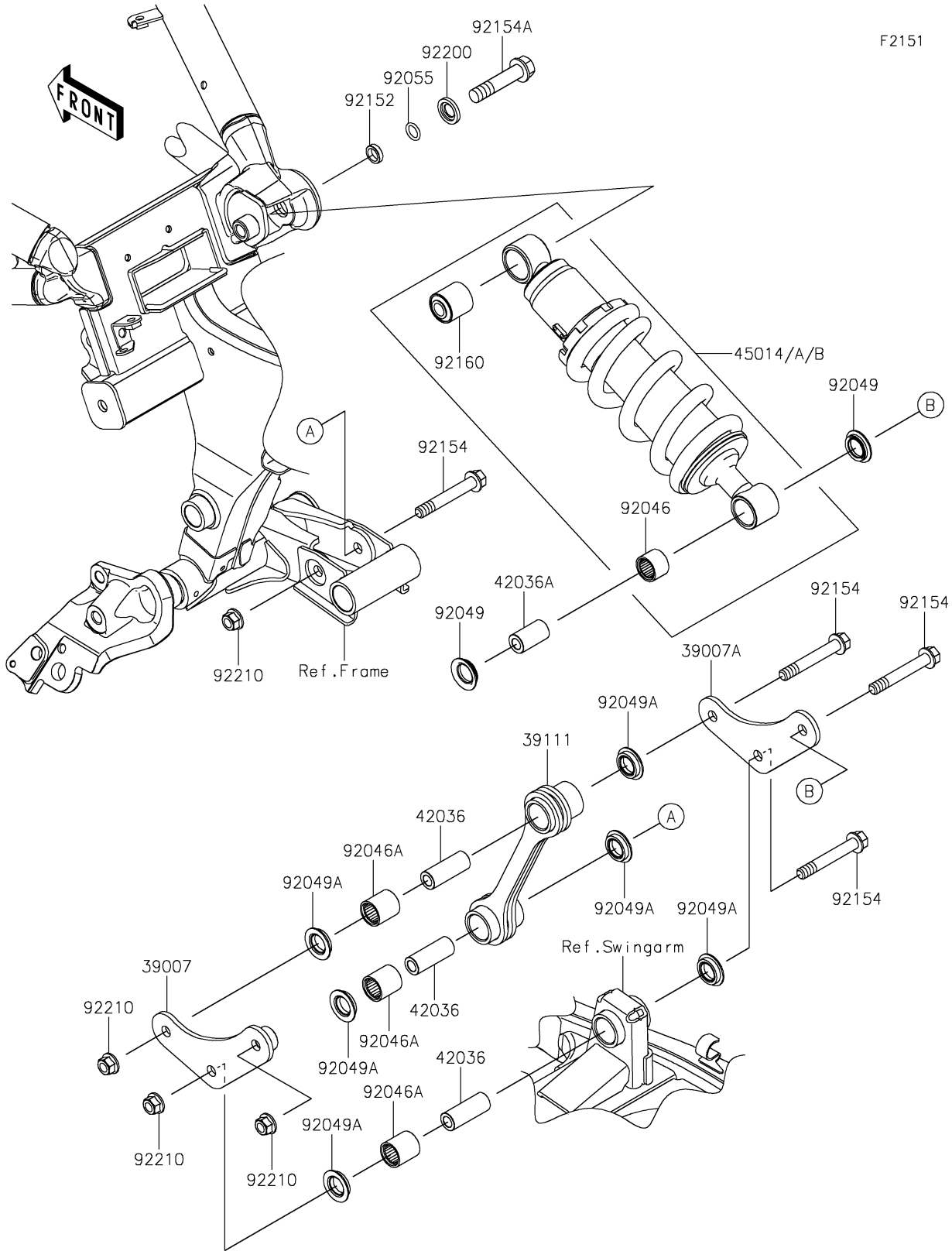

© 2026 Kawasaki Motors Corp., U.S.A.

2022 VULCAN® S

PARTS LIST

Suspension/Shock Absorber

ITEM NAME	PART NUMBER	QUANTITY
ARM-SUSP,LINK,LH,F.BLACK (Ref # 39007)	39007-0385-21	1
ARM-SUSP,LINK,RH,F.BLACK (Ref # 39007A)	39007-0386-21	1
ROD-TIE,SUSPENSION (Ref # 39111)	39111-0339	1
SLEEVE,10.1X17X44.5 (Ref # 42036)	42036-0718	3
SLEEVE,10.1X18X32 (Ref # 42036A)	42036-1344	1
SHOCKABSORBER,BLACK (Ref # 45014)	45014-0472-10	1
SHOCKABSORBER,P.SILVER (Ref # 45014A)	45014-0472-458	1
SHOCKABSORBER,S.RED (Ref # 45014B)	45014-0472-VM	1
BEARING-NEEDLE,SFYZM182417 (Ref # 92046)	92046-1272	1
BEARING-NEEDLE,SFYZM172425 (Ref # 92046A)	92046-1273	3
SEAL-OIL (Ref # 92049)	92049-0133	2
SEAL-OIL,MHA17245.7F (Ref # 92049A)	92049-1223	6
RING-O,11.8X2.4 (Ref # 92055)	92055-0843	1
COLLAR,12.1X16.8X4.4 (Ref # 92152)	92152-0811	1
BOLT,FLANGED,10X67 (Ref # 92154)	92154-0264	4
BOLT,FLANGED,12X55 (Ref # 92154A)	92154-0836	1
DAMPER,SHOCKABSORBER (Ref # 92160)	92160-1161	1
WASHER,12.5X24X3.2 (Ref # 92200)	92200-0519	1
NUT,LOCK,FLANGED,10MM (Ref # 92210)	92210-1139	4

© 2026 Kawasaki Motors Corp., U.S.A.