2022 VULCAN® S

PARTS DIAGRAM

Swingarm

F2141

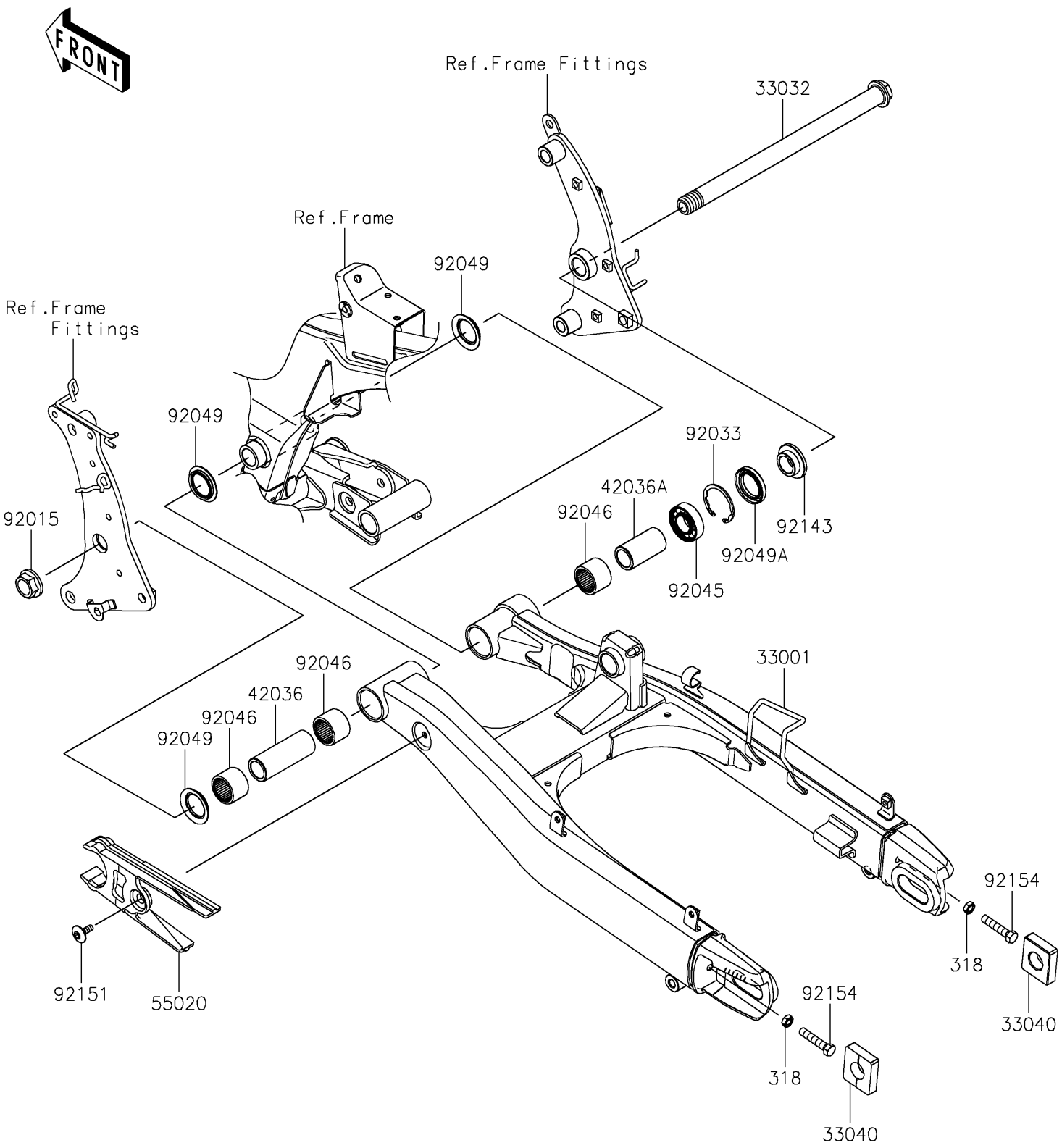

© 2026 Kawasaki Motors Corp., U.S.A.

2022 VULCAN® S

PARTS LIST

Swingarm

ITEM NAME	PART NUMBER	QUANTITY
ARM-COMP-SWING,F.S.BLACK (Ref # 33001)	33001-0625-18R	1
SHAFT-SWING ARM,20X300 (Ref # 33032)	33032-0042	1
ADJUSTER-CHAIN (Ref # 33040)	33040-1109	2
SLEEVE,LH,20.1X28X75.8 (Ref # 42036)	42036-0706	1
SLEEVE,RH,20.1X28X52.3 (Ref # 42036A)	42036-0707	1
GUARD,CHAIN (Ref # 55020)	55020-0985	1
NUT,FLANGED,20MM (Ref # 92015)	92015-1724	1
RING-SNAP,42MM (Ref # 92033)	92033-1041	1
BEARING-BALL,6004UL11 (Ref # 92045)	92045-0017	1
BEARING-NEEDLE,BM2824 (Ref # 92046)	92046-1202	3
SEAL-OIL (Ref # 92049)	92049-0132	3
SEAL-OIL (Ref # 92049A)	92049-0138	1
COLLAR,SWING ARM,RH,L=12.5 (Ref # 92143)	92143-1727	1
BOLT,SOCKET,6X18 (Ref # 92151)	92151-1149	1
BOLT,8X40 (Ref # 92154)	92154-0837	2
NUT-HEX-SMALL,8MM (Ref # 318)	318BA0800	2

© 2026 Kawasaki Motors Corp., U.S.A.