2022 Z900

PARTS DIAGRAM

Ignition Switch/Locks/Reflectors

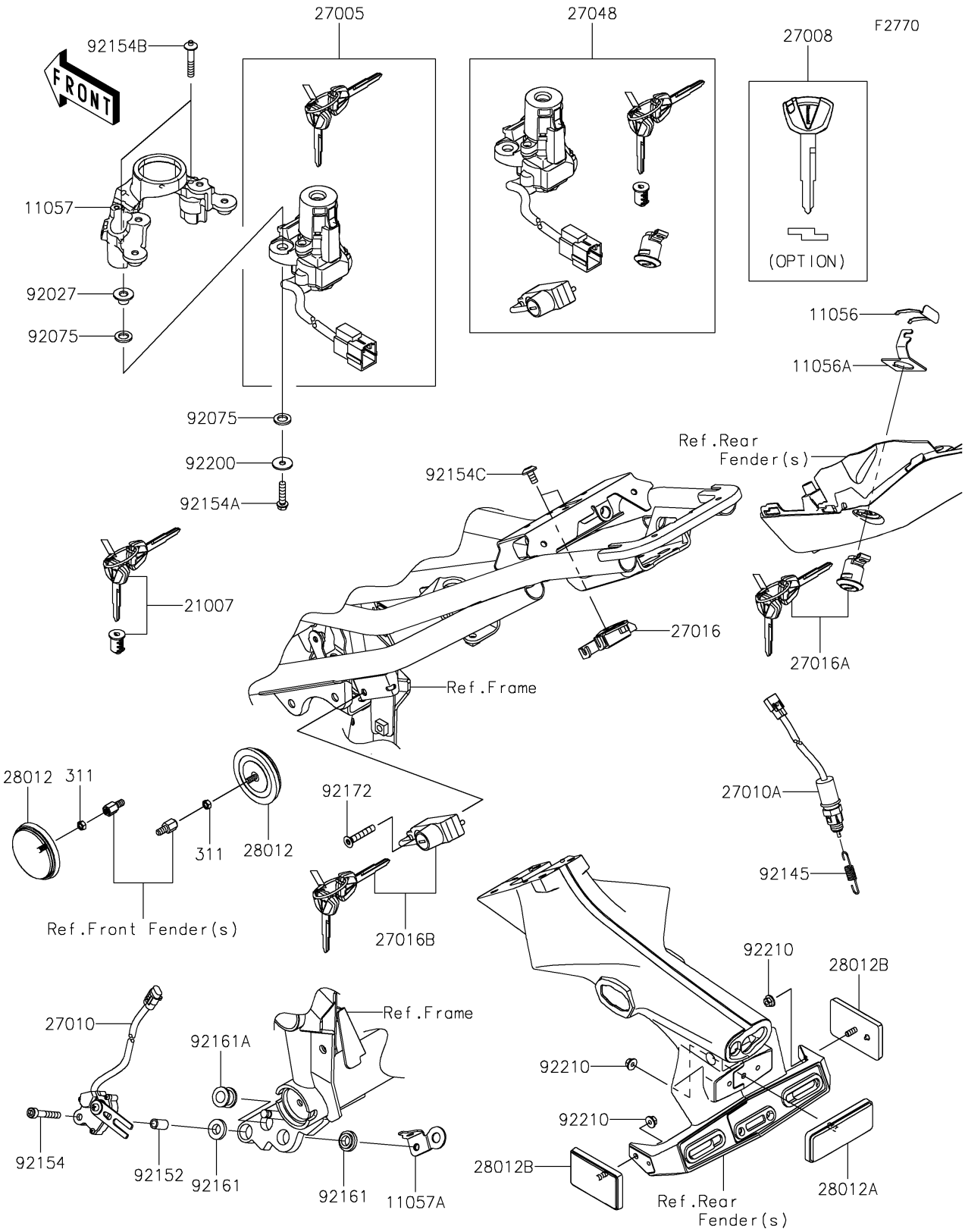

© 2026 Kawasaki Motors Corp., U.S.A.

2022 Z900

PARTS LIST

Ignition Switch/Locks/Reflectors

Kawasaki
Let the Good Times Roll®

ITEM NAME	PART NUMBER	QUANTITY
BRACKET,CLASP (Ref # 11056)	11056-0238	1
BRACKET,SEAT LOCK (Ref # 11056A)	11056-2119	1
BRACKET,IG. SWITCH (Ref # 11057)	11057-0251	1
BRACKET (Ref # 11057A)	11057-0319	1
ROTOR,LOCK,TANK CAP (Ref # 21007)	21007-5083	1
SWITCH-ASSY-IGNITION (Ref # 27005)	27005-0673	1
KEY-LOCK,BLANK (Ref # 27008)	27008-0596	1
SWITCH,SIDE STAND (Ref # 27010)	27010-0722	1
SWITCH,REAR BRAKE (Ref # 27010A)	27010-0937	1
LOCK-ASSY,SEAT STRIKER (Ref # 27016)	27016-0008	1
LOCK-ASSY,SEAT (Ref # 27016A)	27016-5386	1
LOCK-ASSY,HELMET (Ref # 27016B)	27016-5397	1
SWITCH-ASSY (Ref # 27048)	27048-5223	1
REFLECTOR-REFLEX,FR,SIDE (Ref # 28012)	28012-0001	2
REFLECTOR-REFLEX (Ref # 28012A)	28012-1077	1
REFLECTOR-REFLEX (Ref # 28012B)	28012-1088	2
COLLAR,L=9.6 (Ref # 92027)	92027-1045	2
DAMPER (Ref # 92075)	92075-1564	4
SPRING,REAR BRAKE (Ref # 92145)	92145-2219	1
COLLAR,6.5X9.5X17 (Ref # 92152)	92152-2274	1
BOLT,SOCKET,6X40 (Ref # 92154)	92154-0505	1
BOLT,FLANGED,6X25 (Ref # 92154A)	92154-2154	2
BOLT,E TYPE TORX,6X35 (Ref # 92154B)	92154-2207	2
BOLT,SOCKET,6X12 (Ref # 92154C)	92154-2355	2
DAMPER (Ref # 92161)	92161-0117	2
DAMPER (Ref # 92161A)	92161-0118	1
SCREW,HEXLOBE,6X35 (Ref # 92172)	92172-0835	1
WASHER,6X20X1.6 (Ref # 92200)	92200-0780	2
NUT,FLANGED,5MM (Ref # 92210)	92210-0007	3

© 2026 Kawasaki Motors Corp., U.S.A.

2022 Z900

PARTS LIST

Ignition Switch/Locks/Reflectors

ITEM NAME	PART NUMBER	QUANTITY
NUT-HEX,5MM (Ref # 311)	311AB0500	2

© 2026 Kawasaki Motors Corp., U.S.A.