2022 Z900

PARTS DIAGRAM

Turn Signals

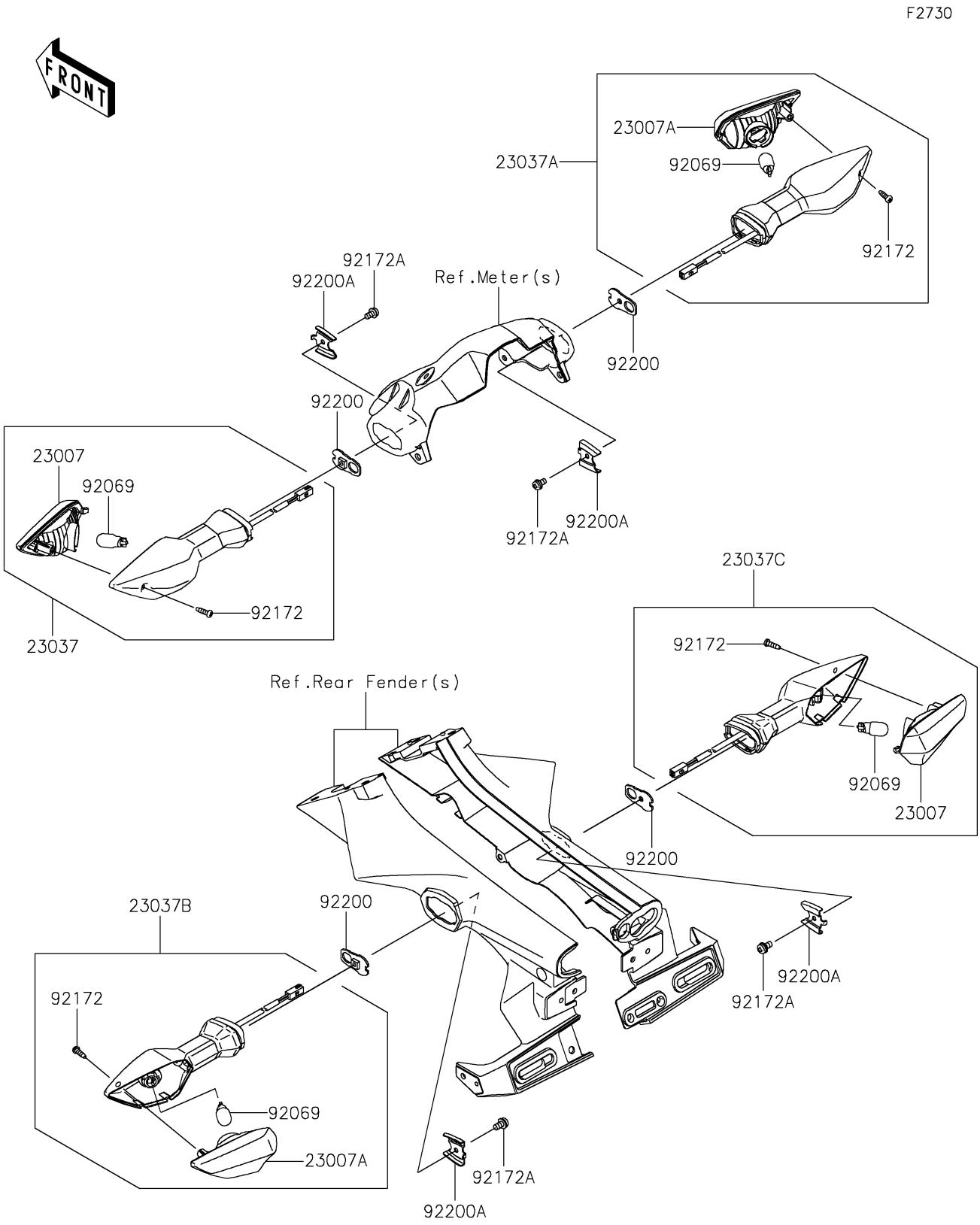

© 2026 Kawasaki Motors Corp., U.S.A.

2022 Z900

PARTS LIST

Turn Signals

ITEM NAME	PART NUMBER	QUANTITY
LENS-COMP (Ref # 23007)	23007-0228	2
LENS-COMP (Ref # 23007A)	23007-0229	2
LAMP-ASSY-SIGNAL,FR,LH (Ref # 23037)	23037-0529	1
LAMP-ASSY-SIGNAL,FR,RH (Ref # 23037A)	23037-0530	1
LAMP-ASSY-SIGNAL,RR,LH (Ref # 23037B)	23037-0531	1
LAMP-ASSY-SIGNAL,RR,RH (Ref # 23037C)	23037-0532	1
BULB,12V 10W (Ref # 92069)	92069-0090	4
SCREW,4X14 (Ref # 92172)	92172-1117	4
SCREW-PAN-WP-CROS,4X8 (Ref # 92172A)	92172-1426	4
WASHER,NUT 4MM (Ref # 92200)	92200-0854	4
WASHER (Ref # 92200A)	92200-0855	4

© 2026 Kawasaki Motors Corp., U.S.A.