2022 Z900

PARTS DIAGRAM

Radiator

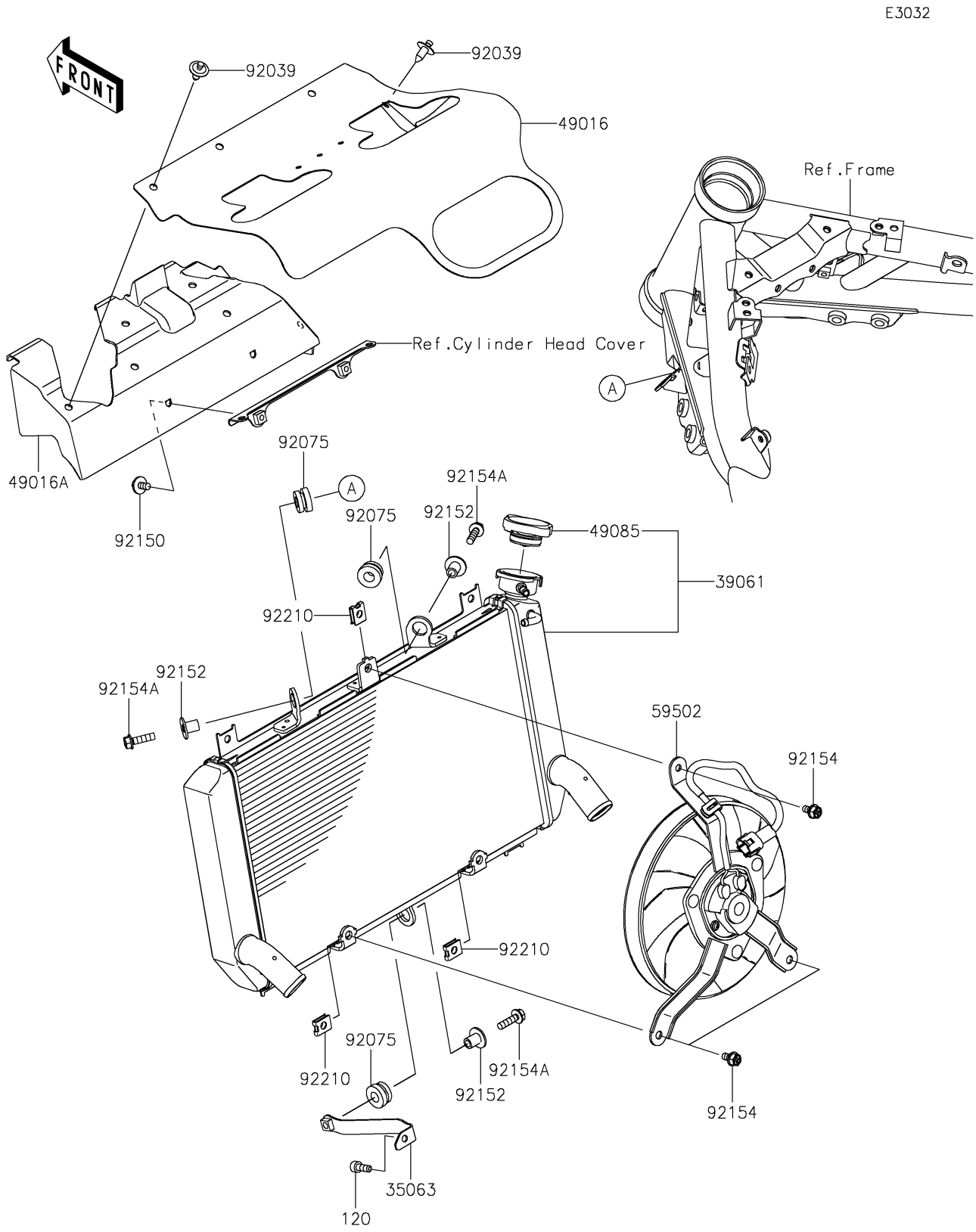

© 2026 Kawasaki Motors Corp., U.S.A.

2022 Z900

PARTS LIST

Radiator

ITEM NAME	PART NUMBER	QUANTITY
STAY (Ref # 35063)	35063-1364	1
RADIATOR-ASSY (Ref # 39061)	39061-0813	1
COVER-SEAL,HEAT (Ref # 49016)	49016-0638	1
COVER-SEAL,HEAT (Ref # 49016A)	49016-0639	1
CAP-ASSY-PRESSURE (Ref # 49085)	49085-0006	1
FAN-ASSY (Ref # 59502)	59502-0614	1
RIVET (Ref # 92039)	92039-1289	2
DAMPER,RUBBER (Ref # 92075)	92075-1123	3
BOLT,6X12 (Ref # 92150)	92150-1891	2
COLLAR (Ref # 92152)	92152-0667	3
BOLT (Ref # 92154)	92154-1429	3
BOLT,FLANGED,6X22 (Ref # 92154A)	92154-2673	3
NUT (Ref # 92210)	92210-1323	3
BOLT-SOCKET,6X16 (Ref # 120)	120CA0616	1

© 2026 Kawasaki Motors Corp., U.S.A.