2022 Z900

PARTS DIAGRAM

Crankcase Bolt Pattern

E1412

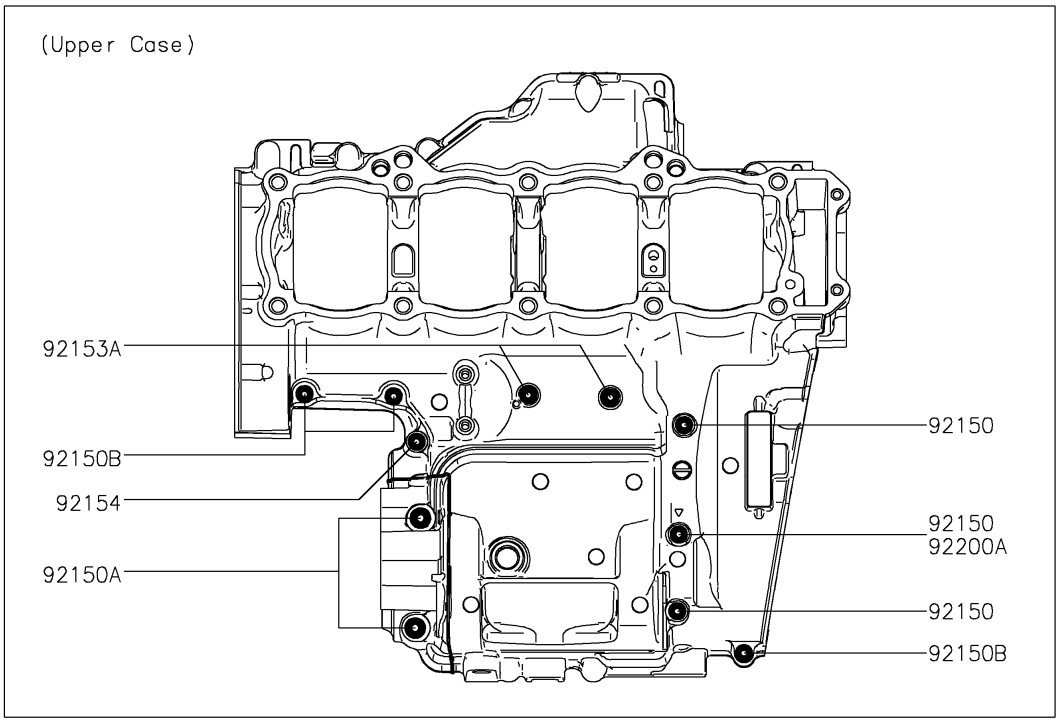

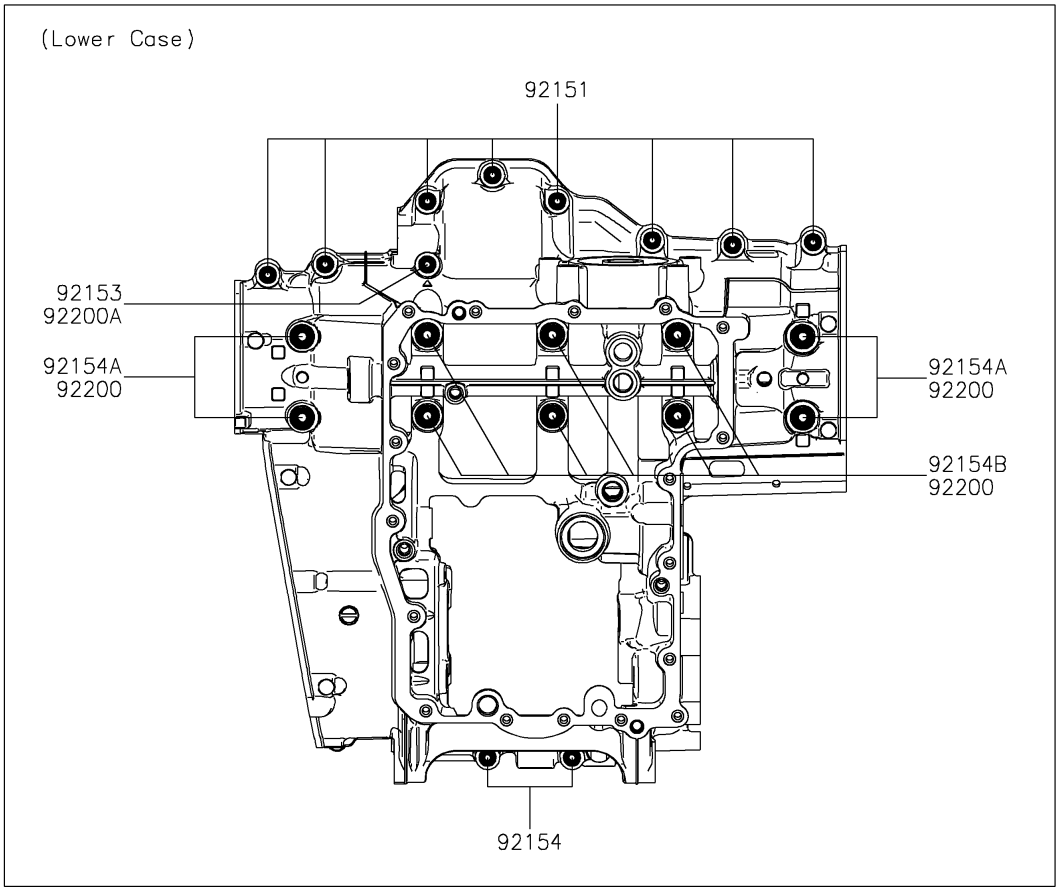

© 2026 Kawasaki Motors Corp., U.S.A.

2022 Z900

PARTS LIST

Crankcase Bolt Pattern

ITEM NAME	PART NUMBER	QUANTITY
BOLT,FLANGED,7X85 (Ref # 92150)	92150-1251	3
BOLT,8X70 (Ref # 92150A)	92150-1483	2
BOLT,6X40 (Ref # 92150B)	92150-1794	3
BOLT,FLANGED,7X45 (Ref # 92151)	92151-1539	8
BOLT,FLANGED,7X60 (Ref # 92153)	92153-1045	1
BOLT,FLANGED,6X68 (Ref # 92153A)	92153-1637	2
BOLT,FLANGED,7X50 (Ref # 92154)	92154-0372	3
BOLT,FLANGED,9X100 (Ref # 92154A)	92154-2639	4
BOLT,FLANGED,9X90 (Ref # 92154B)	92154-2640	6
WASHER,9.2X19X2.3 (Ref # 92200)	92200-0115	10
WASHER (Ref # 92200A)	92200-0556	2

© 2026 Kawasaki Motors Corp., U.S.A.