2015 Ninja® ZX™-10R 30th Anniversary Edition

Kawasaki
Let the Good Times Roll®

PARTS DIAGRAM

Accessory(Engine Guard)

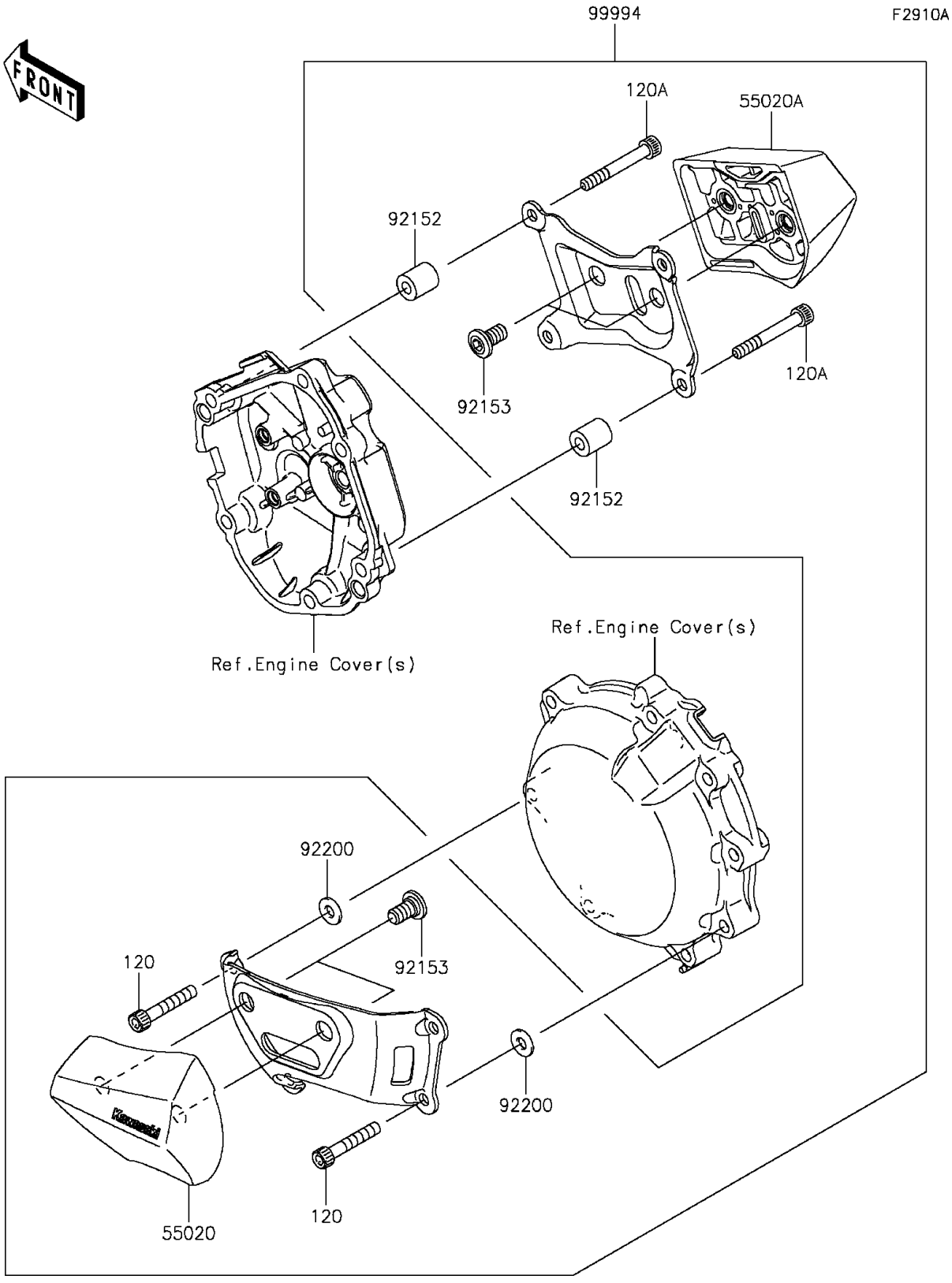

© 2026 Kawasaki Motors Corp., U.S.A.

2015 Ninja® ZX™-10R 30th Anniversary Edition

Kawasaki
Let the Good Times Roll®

PARTS LIST

Accessory(Engine Guard)

ITEM NAME	PART NUMBER	QUANTITY
GUARD,ENGINE,LH (Ref # 55020)	55020-0595	1
GUARD,ENGINE,RH (Ref # 55020A)	55020-0596	1
COLLAR,6.5X14X16 (Ref # 92152)	92152-0940	4
BOLT,SOCKET,8X15 (Ref # 92153)	92153-1810	4
WASHER,6.5X14.5X1.5 (Ref # 92200)	92200-3775	4
KIT-ACCESSORY,ENGINE GUARD (Ref # 99994)	99994-0210	1
BOLT-SOCKET,6X35 (Ref # 120)	120CC0635	4
BOLT-SOCKET,6X45 (Ref # 120A)	120CC0645	4

© 2026 Kawasaki Motors Corp., U.S.A.