2015 Ninja® ZX™-10R 30th Anniversary Edition

Kawasaki
Let the Good Times Roll®

PARTS DIAGRAM

Rear Fender(s)

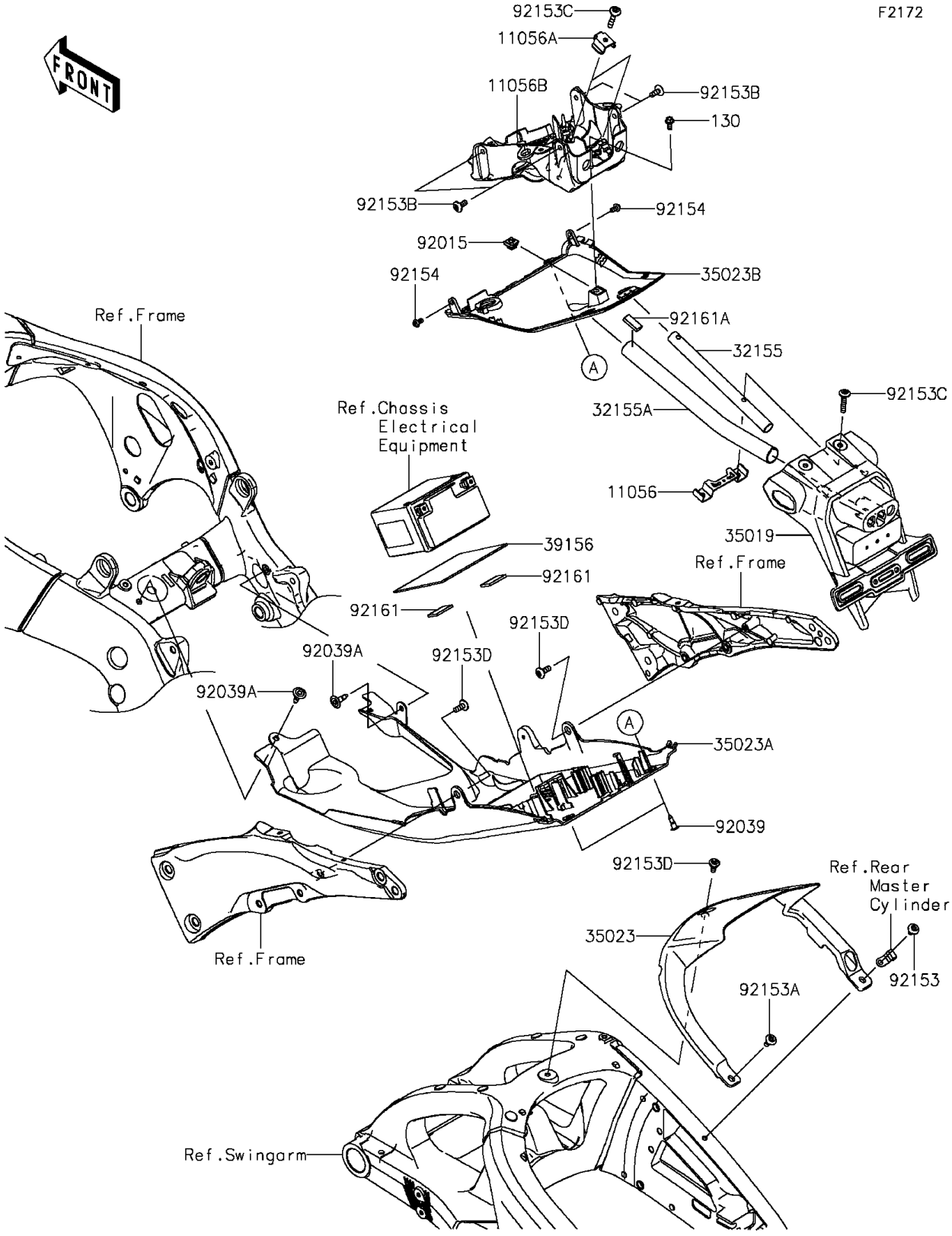

© 2026 Kawasaki Motors Corp., U.S.A.

2015 Ninja® ZX™-10R 30th Anniversary Edition

Kawasaki
Let the Good Times Roll®

PARTS LIST

Rear Fender(s)

ITEM NAME	PART NUMBER	QUANTITY
BRACKET (Ref # 11056)	11056-0245	1
BRACKET (Ref # 11056A)	11056-0433	2
BRACKET,TAIL LAMP (Ref # 11056B)	11056-1855	1
PIPE,SIDE (Ref # 32155)	32155-0968	2
PIPE,CNT (Ref # 32155A)	32155-0969	1
FLAP,RR (Ref # 35019)	35019-0561	1
FENDER-REAR,INNER (Ref # 35023)	35023-0188	1
FENDER-REAR,FR (Ref # 35023A)	35023-0345	1
FENDER-REAR,RR (Ref # 35023B)	35023-0347	1
PAD,110X70X1.0 (Ref # 39156)	39156-0733	1
NUT,5MM (Ref # 92015)	92015-1573	1
RIVET (Ref # 92039)	92039-0068	2
RIVET (Ref # 92039A)	92039-1289	2
BOLT,SOCKET,6X10 (Ref # 92153)	92153-0411	1
BOLT,SOCKET,6X14 (Ref # 92153A)	92153-0422	1
BOLT,SOCKET,6X14 (Ref # 92153B)	92153-1446	4
BOLT,SOCKET,6X30 (Ref # 92153C)	92153-1528	4
BOLT,SOCKET,6MM (Ref # 92153D)	92153-1956	3
BOLT,SOCKET,5X10 (Ref # 92154)	92154-0211	2
DAMPER,20X30X3 (Ref # 92161)	92161-0958	2
DAMPER,10X25X5 (Ref # 92161A)	92161-0989	1
BOLT-FLANGED,5X12 (Ref # 130)	130BB0512	1

© 2026 Kawasaki Motors Corp., U.S.A.