2015 Ninja® ZX™-10R 30th Anniversary Edition

Kawasaki
Let the Good Times Roll®

PARTS DIAGRAM

Front Fender(s)

F2171

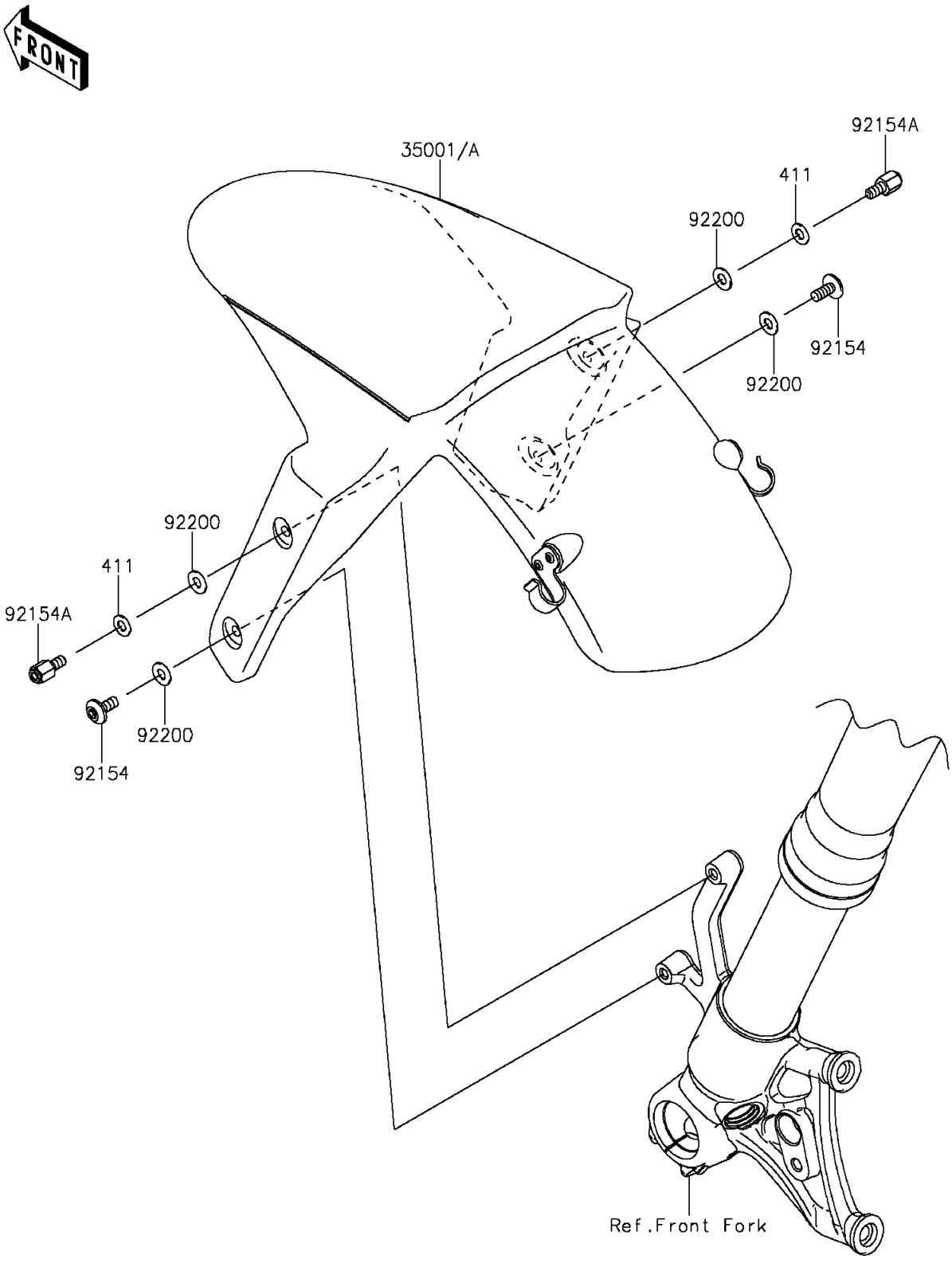

© 2026 Kawasaki Motors Corp., U.S.A.

2015 Ninja® ZX™-10R 30th Anniversary Edition

Kawasaki
Let the Good Times Roll®

PARTS LIST

Front Fender(s)

ITEM NAME	PART NUMBER	QUANTITY
FENDER-ASSY-FRONT,L.GREEN (Ref # 35001A)	35001-0058-777	1
BOLT,SOCKET,6X14 (Ref # 92154)	92154-0745	2
BOLT,6MM (Ref # 92154A)	92154-0746	2
WASHER,6.5X14X1 (Ref # 92200)	92200-1388	4
WASHER-PLAIN,6MM (Ref # 411)	411AB0600	2

© 2026 Kawasaki Motors Corp., U.S.A.