2005 KX85

PARTS DIAGRAM

Swingarm

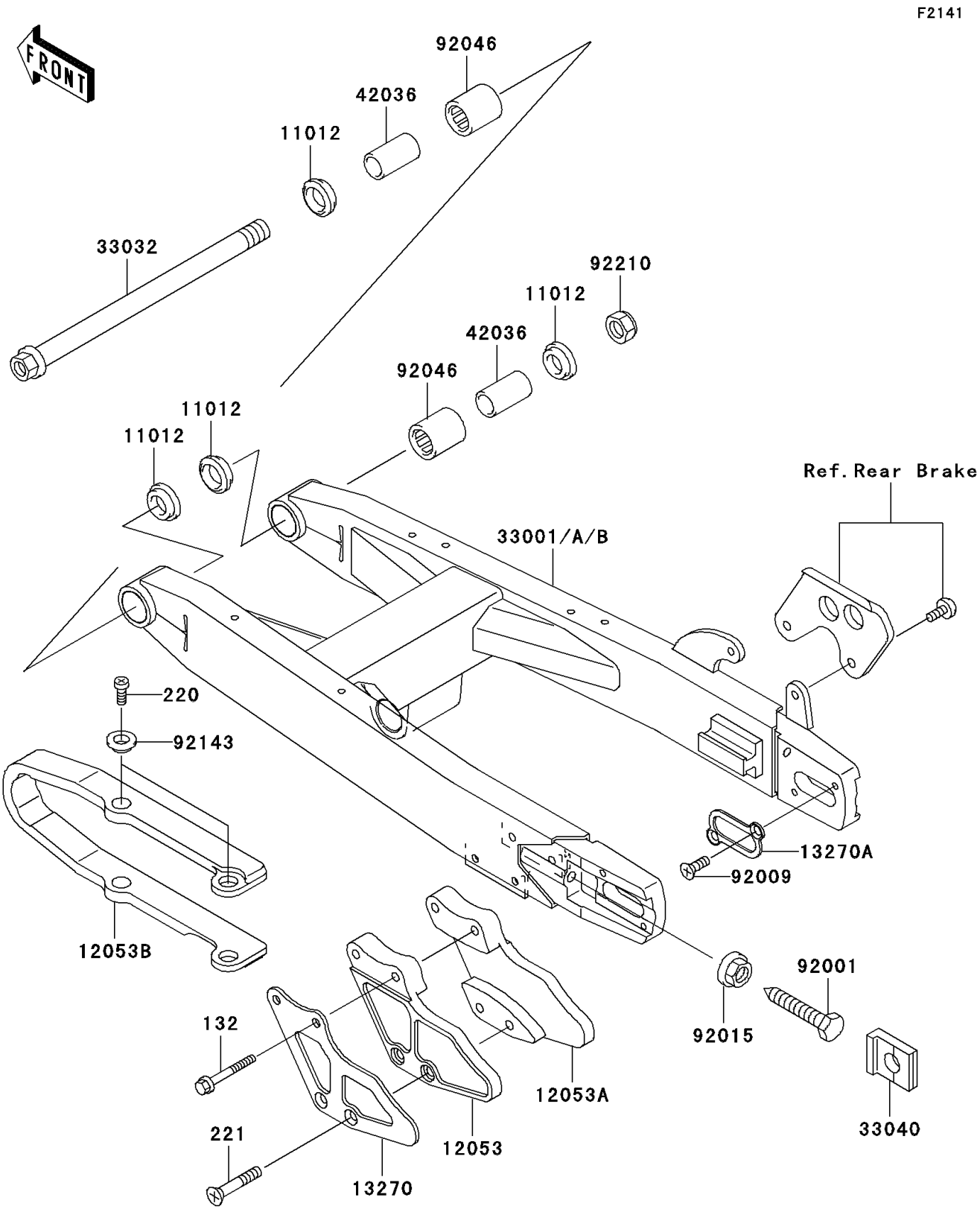

© 2026 Kawasaki Motors Corp., U.S.A.

2005 KX85

PARTS LIST

Swingarm

ITEM NAME	PART NUMBER	QUANTITY
BOLT-FLANGED-SMALL (Ref # 132)	132G0650	2
SCREW-PAN-CROS,5X8 (Ref # 220)	220B0508	4
SCREW-CSK-CROS,6X45 (Ref # 221)	221B0645	2
CAP (Ref # 11012)	11012-1263	4
GUIDE-CHAIN,RR,LH (Ref # 12053)	12053-1203	1
GUIDE-CHAIN,RR,RH (Ref # 12053A)	12053-1204	1
GUIDE-CHAIN,FR (Ref # 12053B)	12053-1414	1
PLATE,GUIDE CHAIN (Ref # 13270)	13270-1829	1
PLATE (Ref # 13270A)	13270-1899	2
ARM-COMP-SWING,P.SILVER (Ref # 33001B)	33001-1542-458	1
SHAFT-SWING ARM (Ref # 33032)	33032-1161	1
ADJUSTER-CHAIN (Ref # 33040)	33040-1173	2
SLEEVE,SWING ARM,L=34 (Ref # 42036)	42036-1067	2
BOLT,8X46 (Ref # 92001)	92001-1179	2
SCREW,5X10 (Ref # 92009)	92009-1828	4
NUT,FLANGED,8MM (Ref # 92015)	92015-1014	2
BEARING-NEEDLE (Ref # 92046)	92046-1046	2
COLLAR (Ref # 92143)	92143-1676	4
NUT,LOCK,12MM (Ref # 92210)	92210-1249	1

© 2026 Kawasaki Motors Corp., U.S.A.