2009 Ninja® ZX™-10R

PARTS DIAGRAM

Clutch

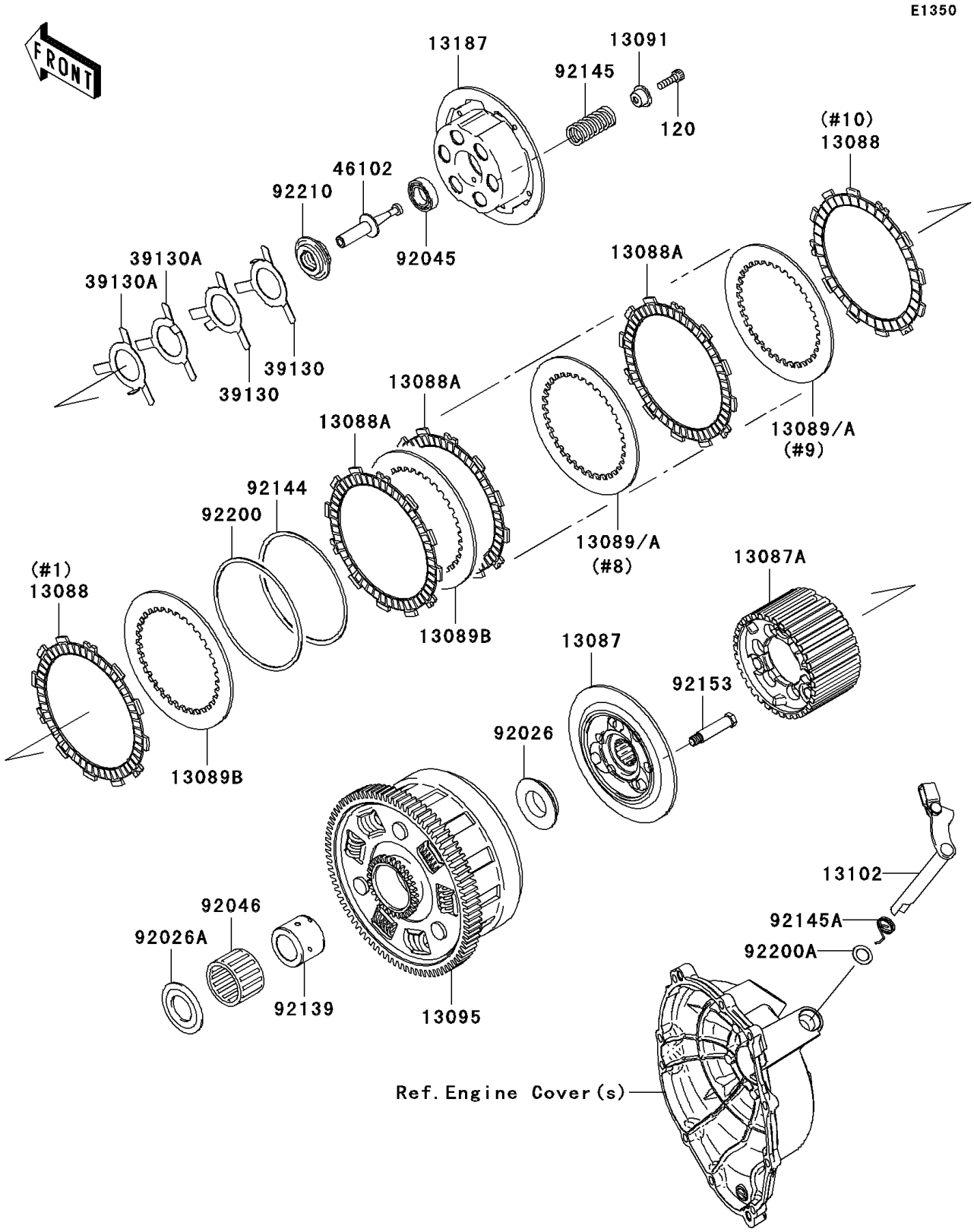

© 2026 Kawasaki Motors Corp., U.S.A.

2009 Ninja® ZX™-10R

PARTS LIST

Clutch

ITEM NAME	PART NUMBER	QUANTITY
HUB-CLUTCH (Ref # 13087)	13087-0010	1
HUB-CLUTCH (Ref # 13087A)	13087-0011	1
PLATE-FRICTION (Ref # 13088)	13088-0003	2
PLATE-FRICTION (Ref # 13088A)	13088-0013	8
PLATE-CLUTCH,T=2.3 (Ref # 13089)	13089-0008	AR
PLATE-CLUTCH,T=2.6 (Ref # 13089A)	13089-0009	2
PLATE-CLUTCH,T=2.9 (Ref # 13089B)	13089-1093	7
HOLDER,CLUTCH SPRING (Ref # 13091)	13091-1840	6
HOUSING-COMP-CLUTCH (Ref # 13095)	13095-0099	1
RELEASE-COMP-CLUTCH (Ref # 13102)	13102-0018	1
PLATE-CLUTCH OPERATING (Ref # 13187)	13187-0006	1
SPRING-LEAF (Ref # 39130)	39130-1078	2
SPRING-LEAF (Ref # 39130A)	39130-1079	2
ROD (Ref # 46102)	46102-0047	1
SPACER (Ref # 92026)	92026-0037	1
SPACER,25X49X2.4 (Ref # 92026A)	92026-0119	1
BEARING-BALL,6903/2A (Ref # 92045)	92045-1053	1
BEARING-NEEDLE,K38X43X28.8X (Ref # 92046)	92046-1263	1
BUSHING,25X38X29.05 (Ref # 92139)	92139-0067	1
SPRING,FRICTION PLATE (Ref # 92144)	92144-1854	1
SPRING,CLUTCH (Ref # 92145)	92145-0220	6
SPRING,RELEASE-COMP (Ref # 92145A)	92145-0325	1
BOLT (Ref # 92153)	92153-0797	6
WASHER,FRICTION PLATE (Ref # 92200)	92200-1260	1
WASHER,12X18.5X0.5 (Ref # 92200A)	92200-1487	1
NUT (Ref # 92210)	92210-0152	1
BOLT-SOCKET,6X20 (Ref # 120)	120Q0620	6

© 2026 Kawasaki Motors Corp., U.S.A.