1999 KX80

PARTS DIAGRAM

Front Brake

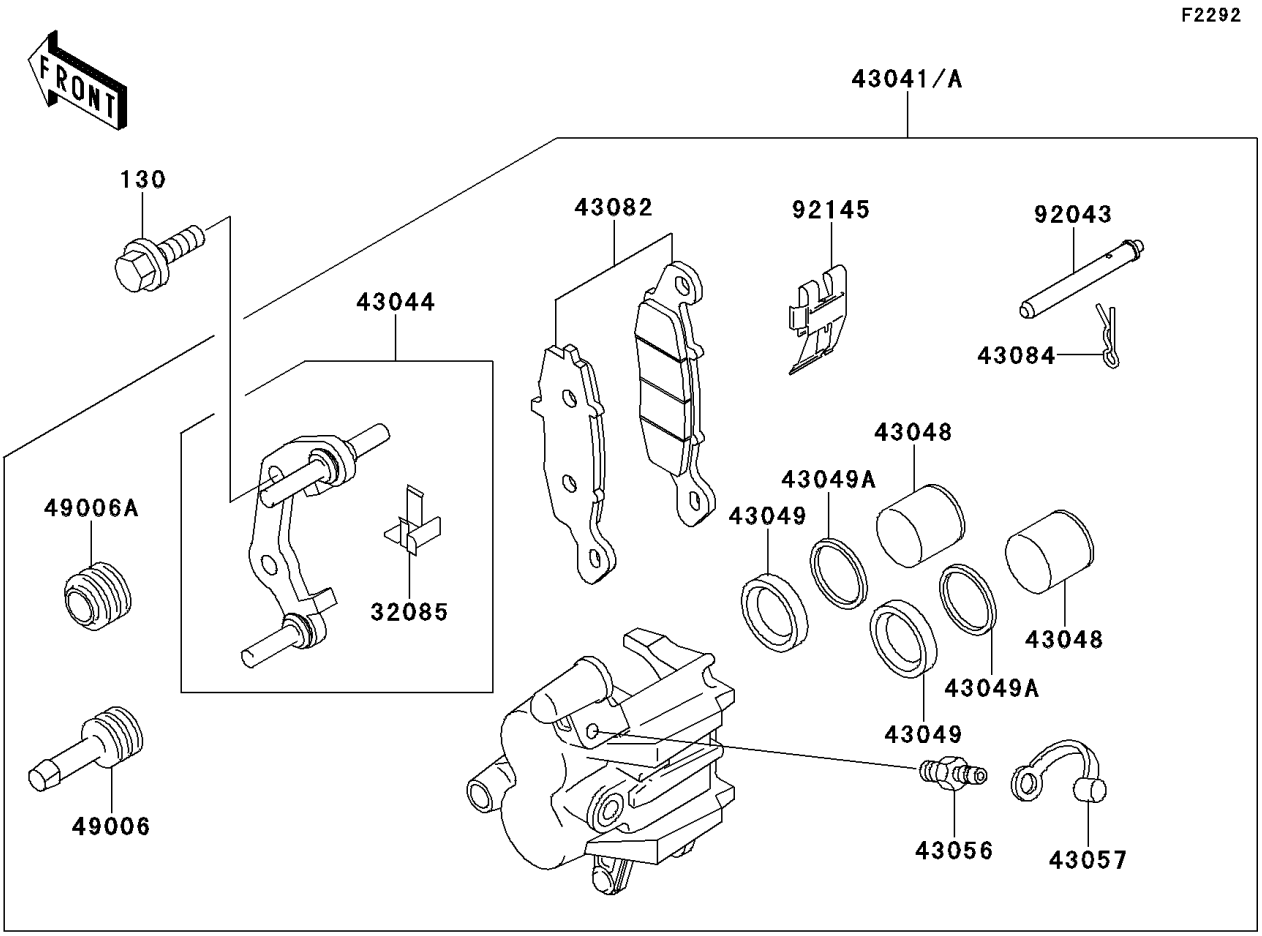

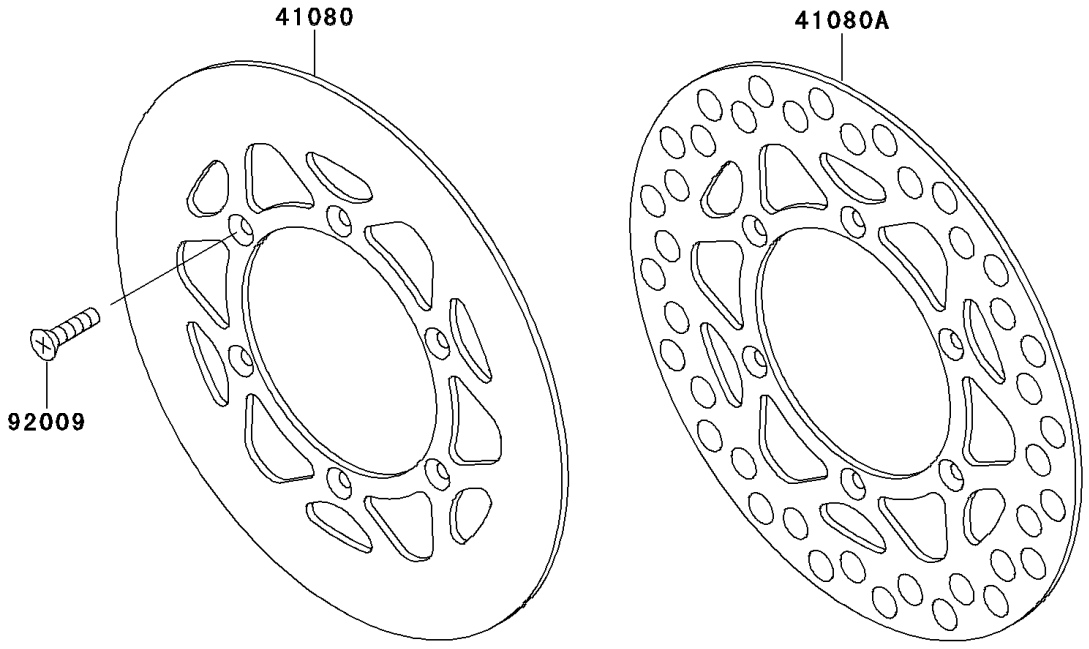

© 2026 Kawasaki Motors Corp., U.S.A.

1999 KX80

PARTS LIST

Front Brake

ITEM NAME	PART NUMBER	QUANTITY
BOLT-FLANGED (Ref # 130)	130P0840	2
STOPPER (Ref # 32085)	32085-1437	1
DISC,FR (Ref # 41080)	41080-1330	1
DISC,FR (Ref # 41080A)	41080-1335	1
CALIPER-ASSY,FR,LH,SILVER (Ref # 43041A)	43041-1681-GN	1
HOLDER-COMP-CALIPER,FR (Ref # 43044)	43044-1119	1
PISTON-CALIPER (Ref # 43048)	43048-1083	2
PACKING,PISTON (Ref # 43049)	43049-1058	2
PACKING,PISTON (Ref # 43049A)	43049-1059	2
BREATHER-BRAKE (Ref # 43056)	43056-1054	1
CAP-BREATHER (Ref # 43057)	43057-003	1
PAD-ASSY-BRAKE (Ref # 43082)	43082-1196	1
CLAMP,PAD (Ref # 43084)	43084-003	1
BOOT,CALIPER (Ref # 49006)	49006-1054	1
BOOT,CALIPER (Ref # 49006A)	49006-1055	1
SCREW,6X10 (Ref # 92009)	92009-1375	6
PIN,PAD (Ref # 92043)	92043-1356	1
SPRING,PAD (Ref # 92145)	92145-1260	1

© 2026 Kawasaki Motors Corp., U.S.A.