2022 Z650RS

PARTS DIAGRAM

Accessory(Slider)

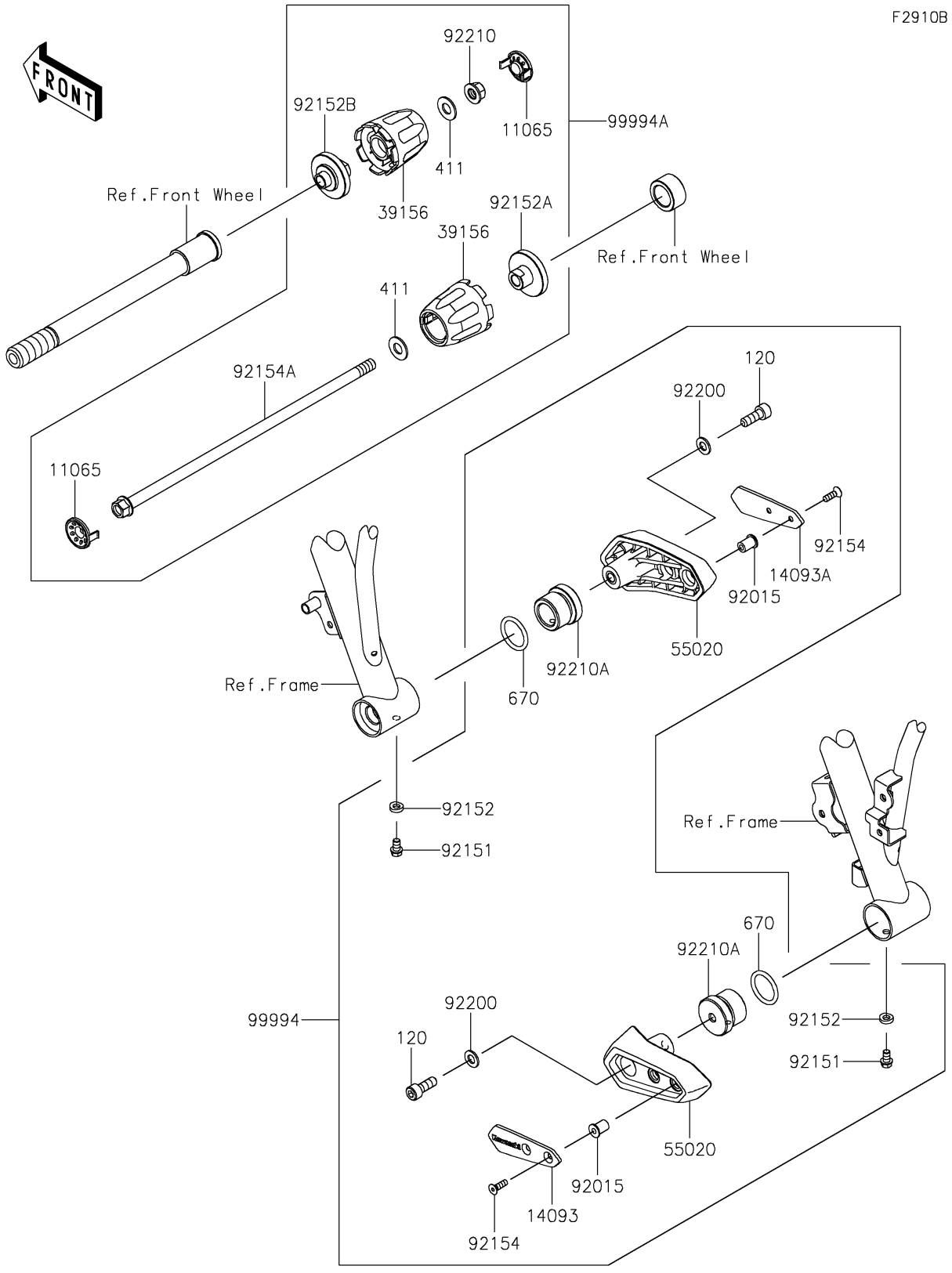

© 2026 Kawasaki Motors Corp., U.S.A.

2022 Z650RS

PARTS LIST

Accessory(Slider)

ITEM NAME	PART NUMBER	QUANTITY
CAP,B.SILVER (Ref # 11065)	11065-1313-54N	2
COVER,SLIDER,LH (Ref # 14093)	14093-0971	1
COVER,SLIDER,RH (Ref # 14093A)	14093-0972	1
PAD,AXLE SLIDER (Ref # 39156)	39156-2212	2
GUARD (Ref # 55020)	55020-1997	2
NUT,WELL,5MM (Ref # 92015)	92015-1757	4
BOLT,6X10 (Ref # 92151)	92151-1277	2
COLLAR,6.3X12 (Ref # 92152)	92152-2236	2
COLLAR,LH (Ref # 92152A)	92152-2272	1
COLLAR,RH (Ref # 92152B)	92152-2273	1
BOLT,SOCKET,5X16 (Ref # 92154)	92154-1014	4
BOLT,FLANGED,10X310 (Ref # 92154A)	92154-4229	1
WASHER,8.4X16X1.6 (Ref # 92200)	92200-0807	2
NUT,LOCK,FLANGED,10MM (Ref # 92210)	92210-1139	1
NUT (Ref # 92210A)	92210-1505	2
FRAME SLIDER (Ref # 99994)	99994-1541	1
AXLE SLIDER,B.SILVER (Ref # 99994A)	99994-1542-54N	1
BOLT-SOCKET,8X22 (Ref # 120)	120CA0822	2
WASHER-PLAIN,10MM (Ref # 411)	411AA1000	2
O RING,26MM (Ref # 670)	670B3026	2

© 2026 Kawasaki Motors Corp., U.S.A.