2022 Z650RS

PARTS DIAGRAM

Taillight(s)

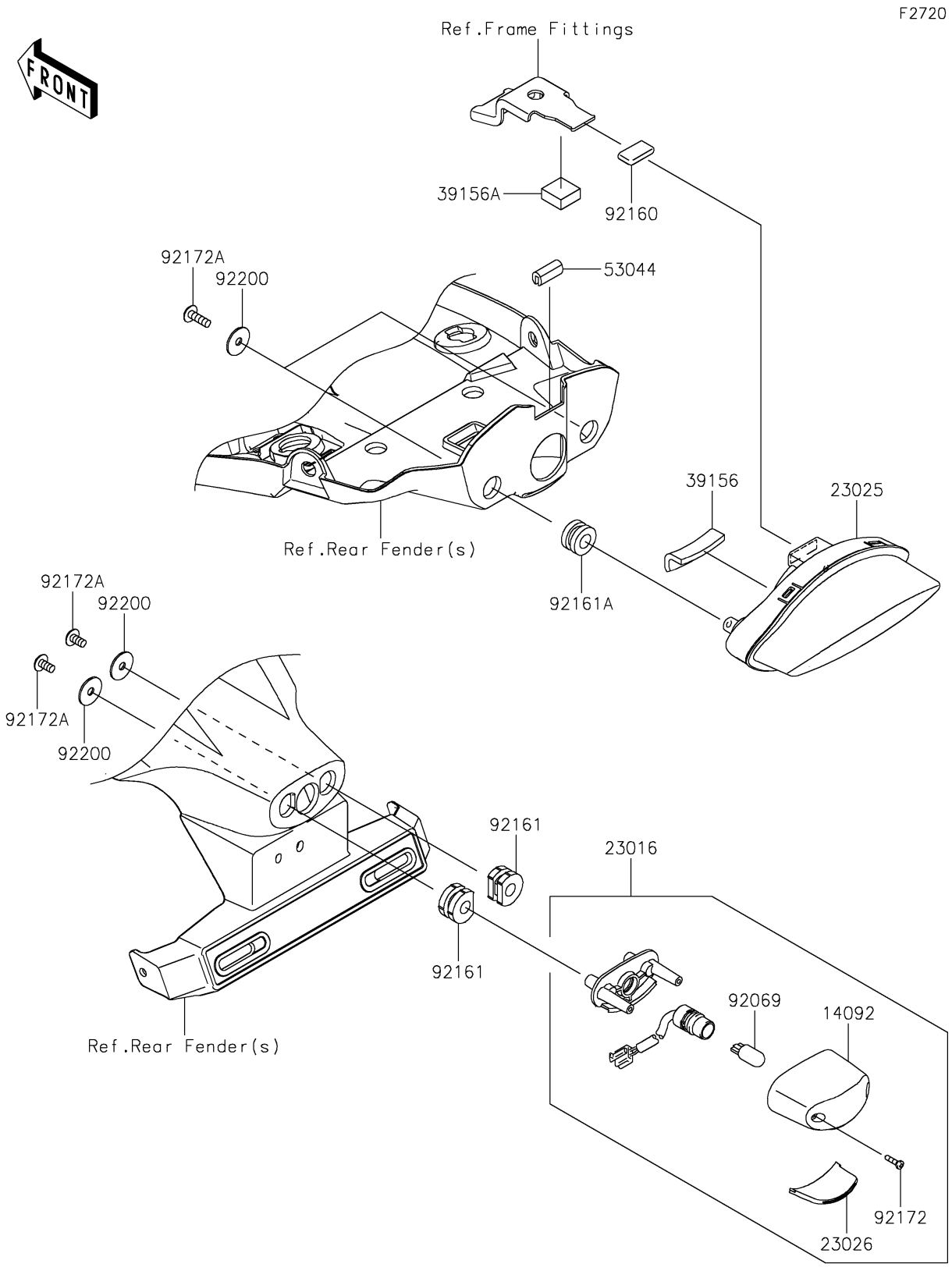

© 2026 Kawasaki Motors Corp., U.S.A.

2022 Z650RS

PARTS LIST

Taillight(s)

ITEM NAME	PART NUMBER	QUANTITY
COVER,LICENSE LAMP (Ref # 14092)	14092-0001	1
LAMP-ASSY,LICENCE (Ref # 23016)	23016-0610	1
LAMP-TAIL,LED,CCC (Ref # 23025)	23025-0381	1
LENS,LICENCE LAMP (Ref # 23026)	23026-0035	1
PAD,40X20X4 (Ref # 39156)	39156-2690	1
PAD,18X18X8 (Ref # 39156A)	39156-2789	1
TRIM,L=20 (Ref # 53044)	53044-1292	1
BULB,12V 5W (Ref # 92069)	92069-1016	1
DAMPER (Ref # 92160)	92160-1190	1
DAMPER (Ref # 92161)	92161-0776	2
DAMPER (Ref # 92161A)	92161-2375	2
SCREW,TAPPING,2.9X13 (Ref # 92172)	92172-0343	2
SCREW,TAPPING,5X16 (Ref # 92172A)	92172-0427	4
WASHER,5.5X20X1.2 (Ref # 92200)	92200-0284	4

© 2026 Kawasaki Motors Corp., U.S.A.