2022 Z650RS

PARTS DIAGRAM

Headlight(s)

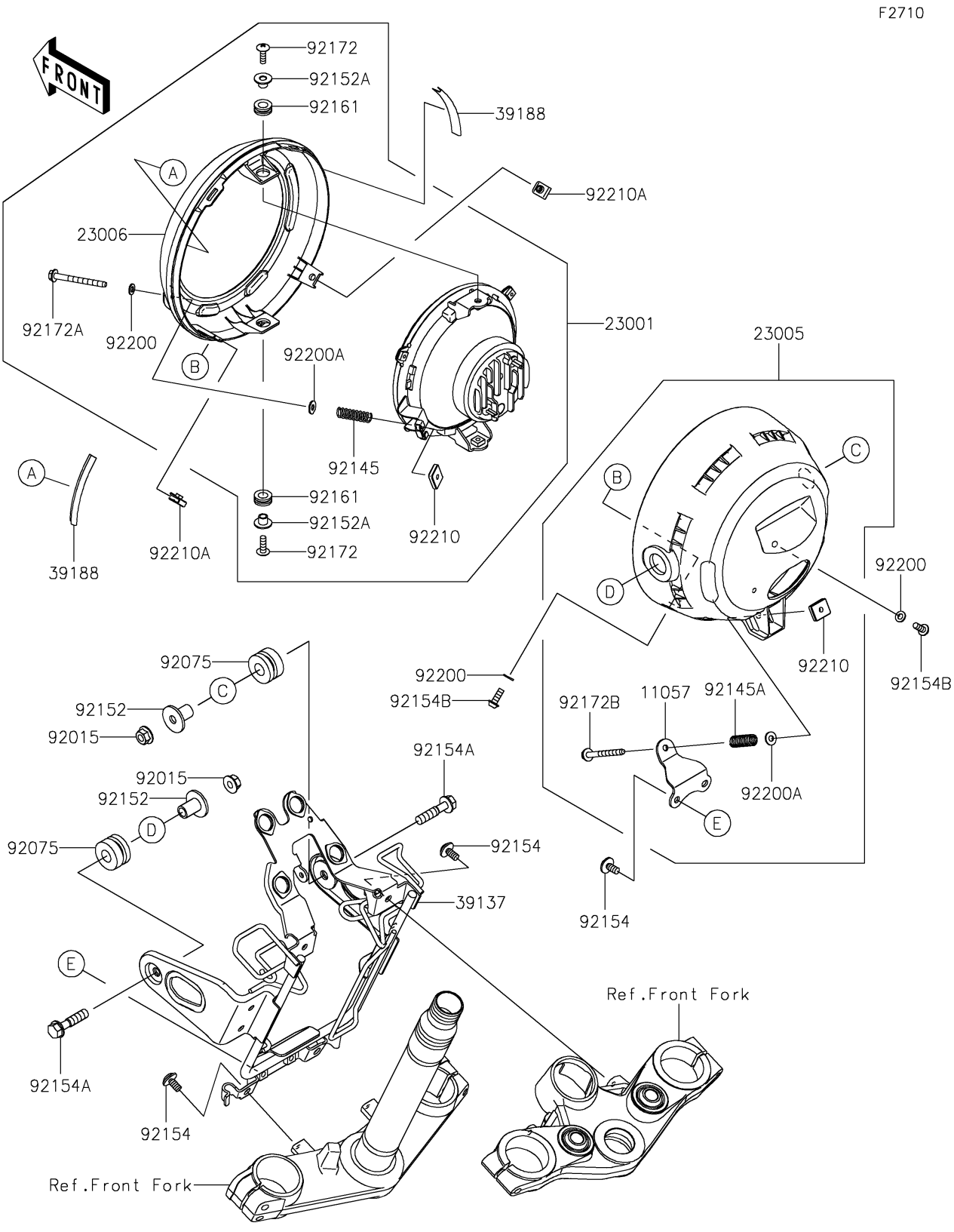

© 2026 Kawasaki Motors Corp., U.S.A.

2022 Z650RS

PARTS LIST

Headlight(s)

ITEM NAME	PART NUMBER	QUANTITY
BRACKET,HEAD LAMP BODY (Ref # 11057)	11057-7150	1
LAMP-ASSY-HEAD,LED (Ref # 23001)	23001-0071	1
BODY-COMP-HEAD LAMP (Ref # 23005)	23005-0315	1
RIM-LAMP (Ref # 23006)	23006-0026	1
STAY-COMP (Ref # 39137)	39137-0714	1
TAPE,70X15 (Ref # 39188)	39188-0597	2
NUT,FLANGED,8MM (Ref # 92015)	92015-1014	2
DAMPER (Ref # 92075)	92075-1736	2
SPRING (Ref # 92145)	92145-1990	1
SPRING (Ref # 92145A)	92145-1991	1
COLLAR,8X12X20.3 (Ref # 92152)	92152-2433	2
COLLAR (Ref # 92152A)	92152-2785	2
BOLT,SOCKET,6X12 (Ref # 92154)	92154-2706	6
BOLT,FLANGED,8X35 (Ref # 92154A)	92154-2923	2
BOLT,HEX HEAD,5X14 (Ref # 92154B)	92154-4228	2
DAMPER (Ref # 92161)	92161-2376	2
SCREW,PAN-CROSS,5X15 (Ref # 92172)	92172-1407	2
SCREW,FLANGED,5X52 (Ref # 92172A)	92172-1408	1
SCREW,FLANGED,5X52 (Ref # 92172B)	92172-1409	1
WASHER,5.2X10X1 (Ref # 92200)	92200-2435	3
WASHER,5.2X12X1 (Ref # 92200A)	92200-2436	2
NUT (Ref # 92210)	92210-1850	2
NUT (Ref # 92210A)	92210-1851	2

© 2026 Kawasaki Motors Corp., U.S.A.