2022 Z650RS

PARTS DIAGRAM

Tires

F2210

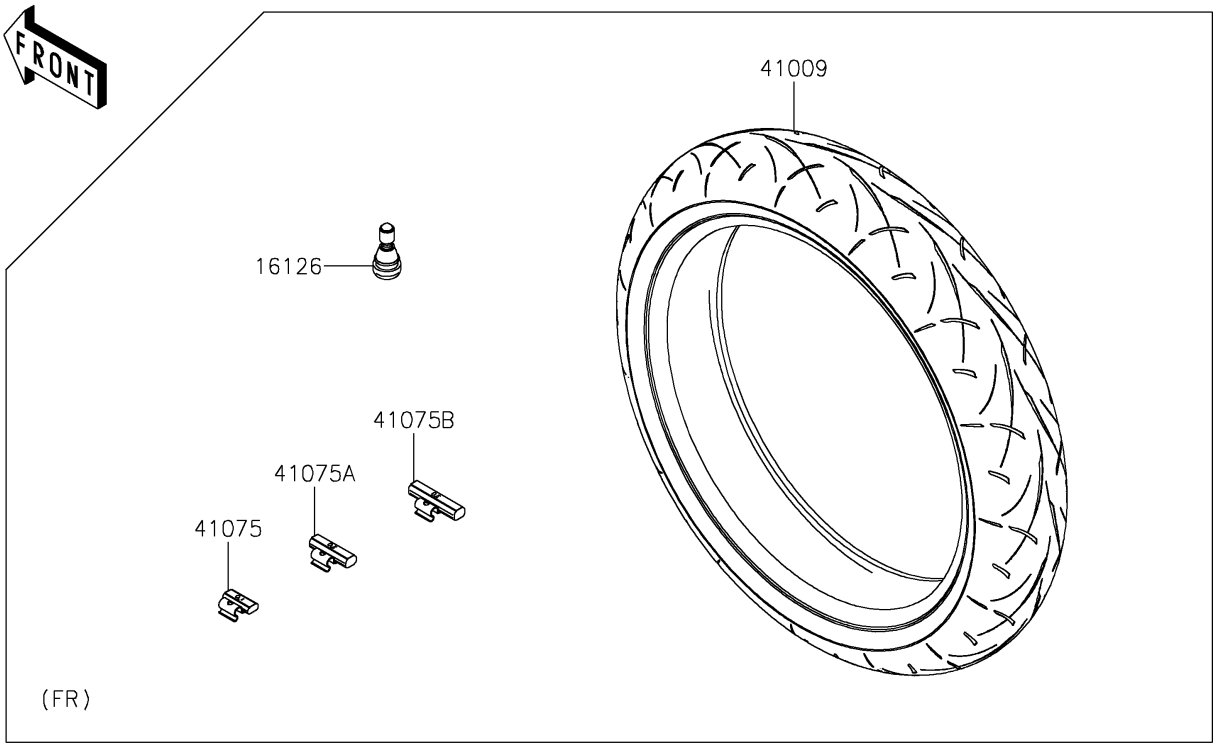

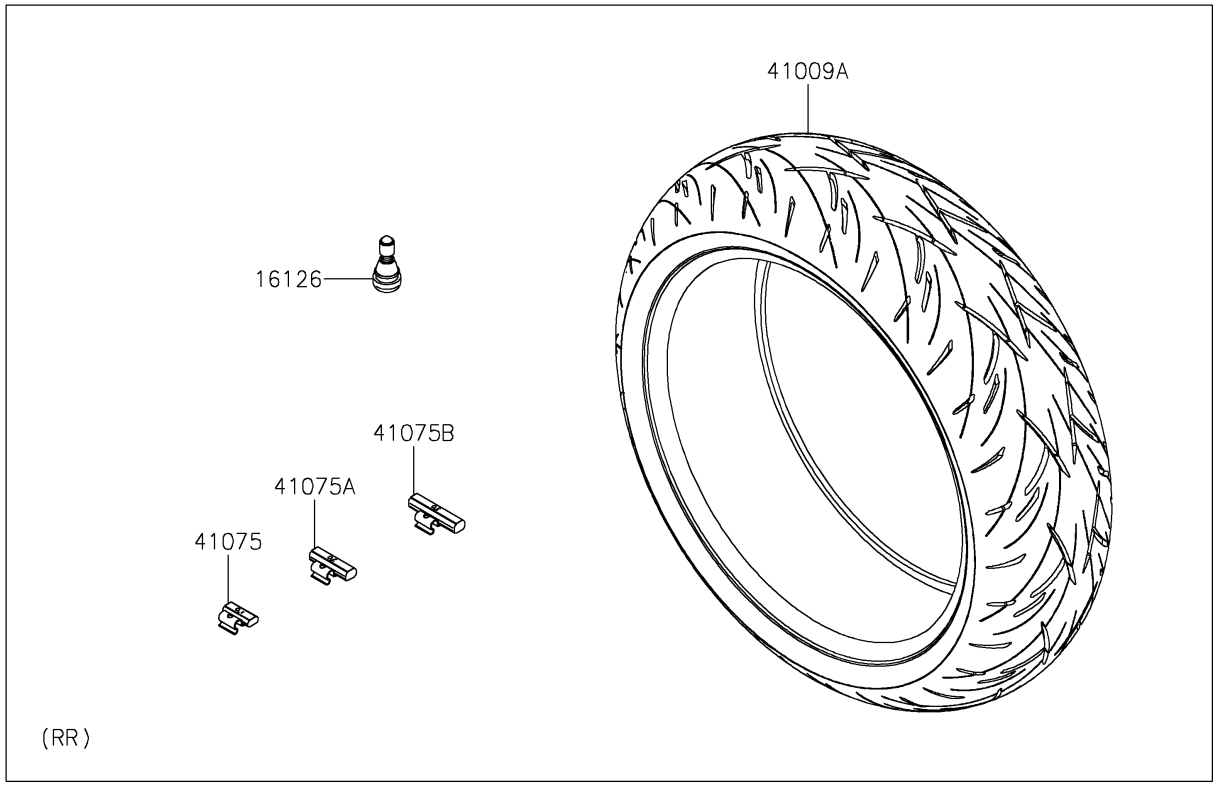

© 2026 Kawasaki Motors Corp., U.S.A.

2022 Z650RS

PARTS LIST

Tires

ITEM NAME	PART NUMBER	QUANTITY
VALVE,TIRE (Ref # 16126)	16126-1140	2
TIRE,FR,120/70ZR17(58W) (Ref # 41009)	41009-0832	1
TIRE,RR,160/60ZR17(69W) (Ref # 41009A)	41009-0833	1
BALANCER-WHEEL,10G,SILVER (Ref # 41075)	41075-0007	AR
BALANCER-WHEEL,20G,SILVER (Ref # 41075A)	41075-0008	AR
BALANCER-WHEEL,30G,SILVER (Ref # 41075B)	41075-0009	AR

© 2026 Kawasaki Motors Corp., U.S.A.