# 2020 W800

## PARTS DIAGRAM

### Throttle

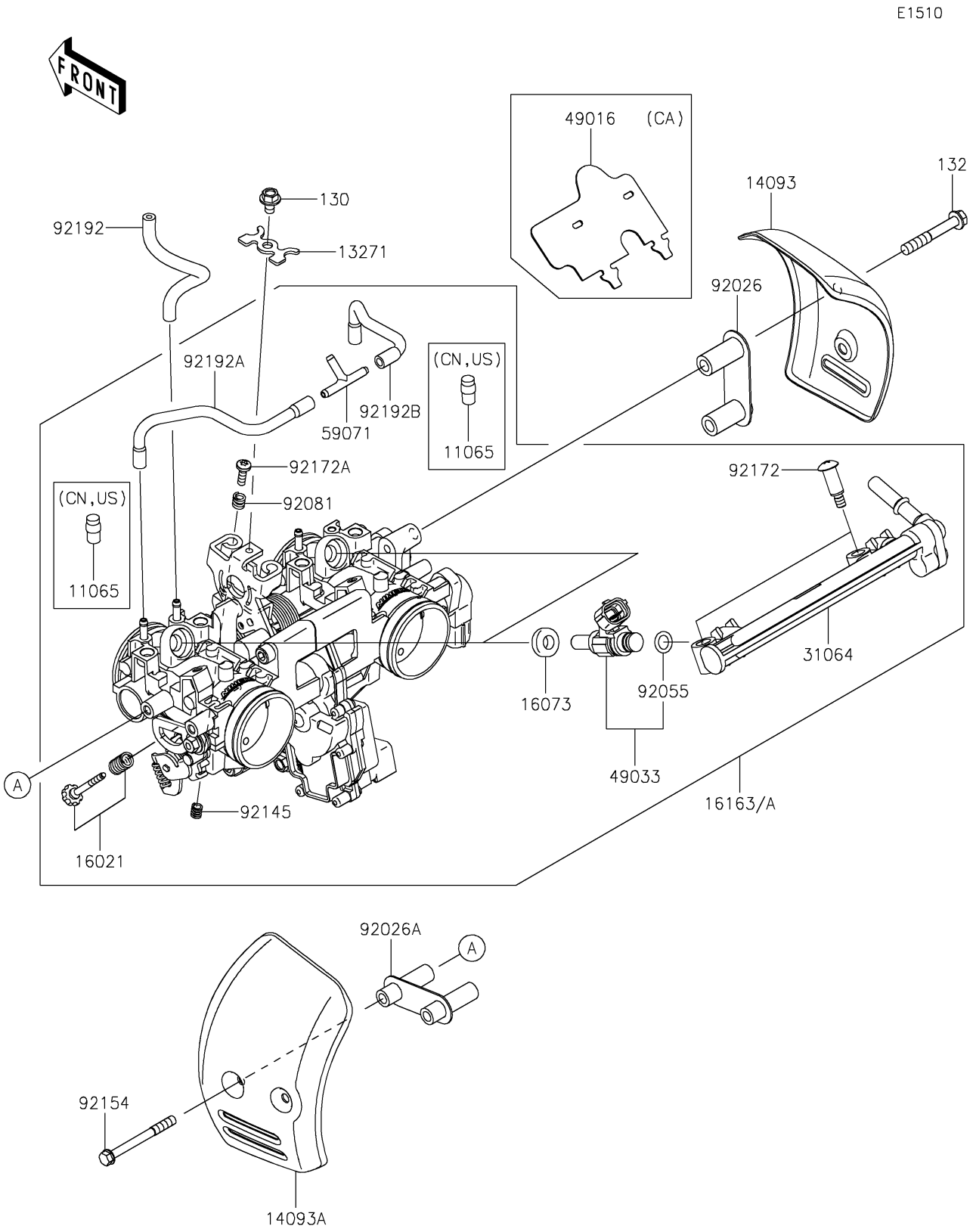


© 2026 Kawasaki Motors Corp., U.S.A.

# 2020 W800

## PARTS LIST

### Throttle

| ITEM NAME | PART NUMBER | QUANTITY |
|---|---|---|
| CAP (Ref # 11065) | 11065-0018 | 2 |
| PLATE (Ref # 13271) | 13271-0056 | 1 |
| COVER,RH (Ref # 14093) | 14093-0024 | 1 |
| COVER,LH (Ref # 14093A) | 14093-0938 | 1 |
| SCREW-THROTTLE STOP (Ref # 16021) | 16021-0054 | 1 |
| INSULATOR (Ref # 16073) | 16073-0129 | 2 |
| THROTTLE-ASSY,TTK34 (Ref # 16163) | 16163-0950 | 1 |
| THROTTLE-ASSY,TTK34 (Ref # 16163A) | 16163-0997 | 1 |
| PIPE-COMP,FUEL (Ref # 31064) | 31064-0591 | 1 |
| COVER-SEAL (Ref # 49016) | 49016-0674 | 1 |
| NOZZLE-INJECTION (Ref # 49033) | 49033-0571 | 2 |
| JOINT (Ref # 59071) | 59071-0749 | 1 |
| SPACER (Ref # 92026) | 92026-0166 | 1 |
| SPACER (Ref # 92026A) | 92026-0864 | 1 |
| RING-O,INJECTION NOZZLE (Ref # 92055) | 92055-0124 | 2 |
| SPRING (Ref # 92081) | 92081-1620 | 1 |
| SPRING (Ref # 92145) | 92145-0816 | 1 |
| BOLT-FLANGED-SMALL,5X50 (Ref # 92154) | 92154-4052 | 2 |
| SCREW,PIPE INJECTION (Ref # 92172) | 92172-0064 | 2 |
| SCREW (Ref # 92172A) | 92172-0505 | 1 |
| TUBE,3X7X110 (Ref # 92192) | 92192-0931 | 1 |
| TUBE,3X6X138 (Ref # 92192A) | 92192-1783 | 1 |
| TUBE,3X6X101 (Ref # 92192B) | 92192-1784 | 1 |
| BOLT-FLANGED,5X8 (Ref # 130) | 130BA0508 | 1 |
| BOLT-FLANGED-SMALL,6X40 (Ref # 132) | 132E0640 | 2 |

© 2026 Kawasaki Motors Corp., U.S.A.