1991 KX80

PARTS DIAGRAM

Side Cover

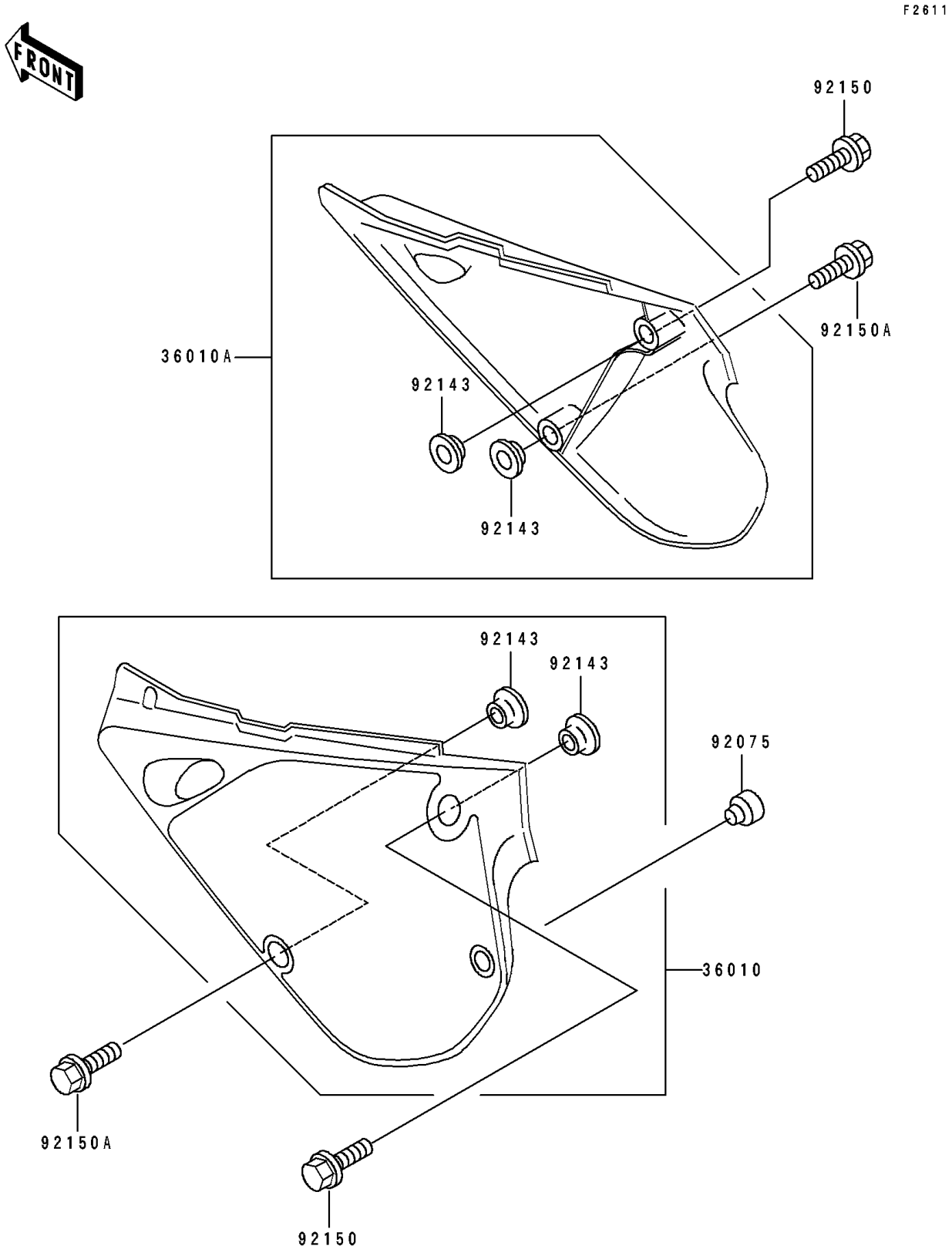

© 2026 Kawasaki Motors Corp., U.S.A.

1991 KX80

PARTS LIST

Side Cover

ITEM NAME	PART NUMBER	QUANTITY
COVER-SIDE,LH,L.GREEN (Ref # 36010)	36010-5408-6W	1
COVER-SIDE,RH,L.GREEN (Ref # 36010A)	36010-5409-6W	1
BOLT,6X16 (Ref # 92002)	92002-1461	4
COLLAR (Ref # 92143)	92143-1470	4

© 2026 Kawasaki Motors Corp., U.S.A.