1991 KX80

PARTS DIAGRAM

Change Drum/Shift Fork

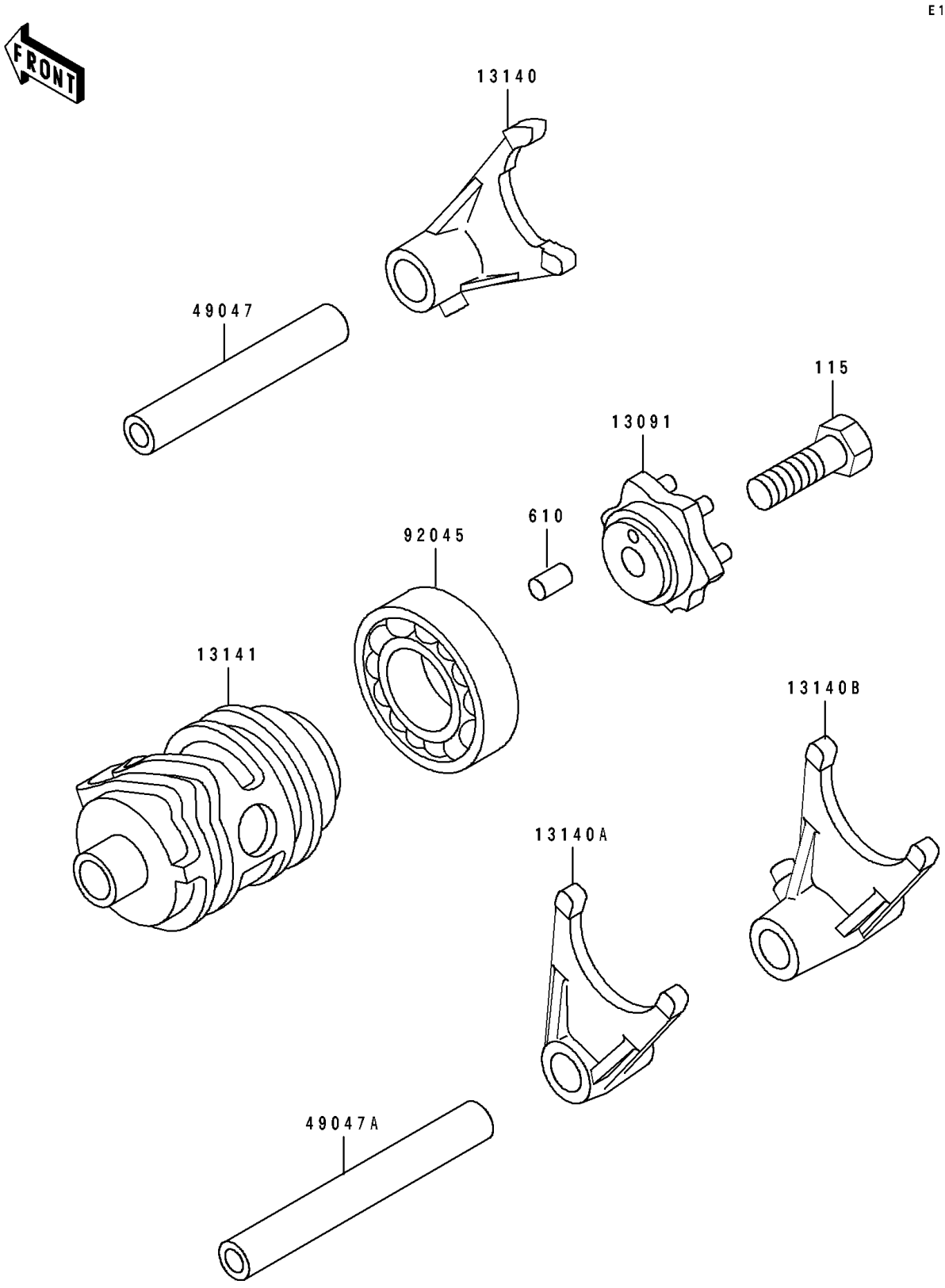

© 2026 Kawasaki Motors Corp., U.S.A.

1991 KX80

PARTS LIST

Change Drum/Shift Fork

ITEM NAME	PART NUMBER	QUANTITY
HOLDER,CHANGE DRUM (Ref # 13091)	13091-1390	1
FORK-SHIFT,5TH&6TH (Ref # 13140)	13140-1139	1
FORK-SHIFT,2ND&3RD (Ref # 13140A)	13140-1140	1
FORK-SHIFT,LOW&4TH (Ref # 13140B)	13140-1141	1
DRUM-CHANGE (Ref # 13141)	13141-1120	1
ROD-SHIFT,5.9X10X64.5 (Ref # 49047)	49047-1063	1
ROD-SHIFT,5.9X10X81 (Ref # 49047A)	49047-1064	1
BEARING-BALL,#6905 (Ref # 92045)	92045-036	1
BOLT-SMALL-UPSET (Ref # 115)	115G0825	1
ROLLER,4X8 (Ref # 610)	610A0408	1

© 2026 Kawasaki Motors Corp., U.S.A.