1991 KX80

PARTS DIAGRAM

Kickstarter Mechanism

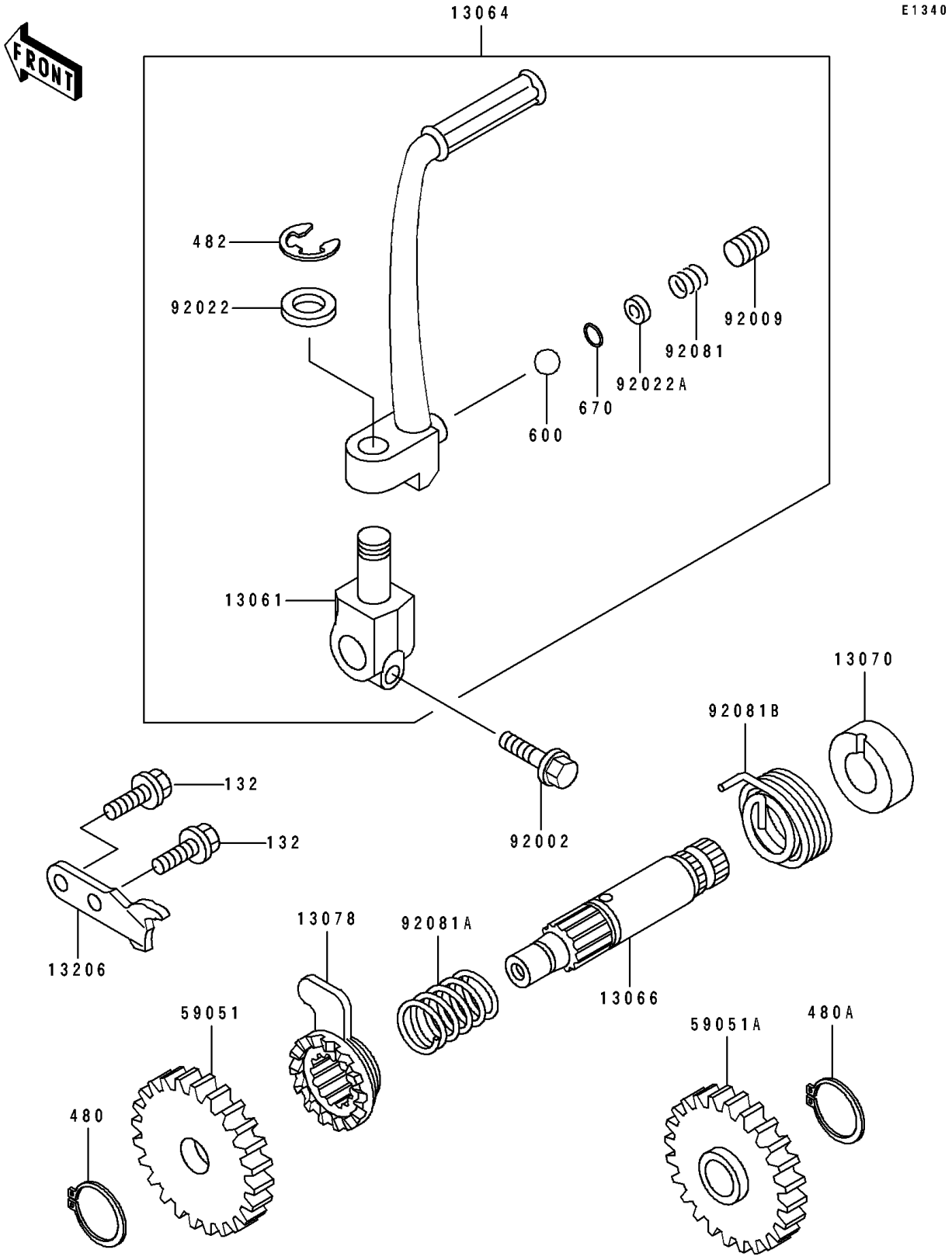

© 2026 Kawasaki Motors Corp., U.S.A.

1991 KX80

PARTS LIST

Kickstarter Mechanism

ITEM NAME	PART NUMBER	QUANTITY
BOSS,KICK LEVER (Ref # 13061)	13061-1301	1
LEVER-ASSY-KICK,PEDAL (Ref # 13064)	13064-1154	1
SHAFT-KICK (Ref # 13066)	13066-1077	1
GUIDE,KICK SPRING (Ref # 13070)	13070-1137	1
RATCHET (Ref # 13078)	13078-1004	1
GUIDE-KICK (Ref # 13206)	13206-1055	1
GEAR-SPUR (Ref # 59051)	59051-1026	1
GEAR-SPUR,31T,KICK (Ref # 59051A)	59051-1147	1
BOLT,6X20 (Ref # 92002)	92002-1237	1
SCREW,SOCKET,8X8 (Ref # 92009)	92009-1312	1
WASHER,12.2X20X1.6 (Ref # 92022)	92022-1236	1
WASHER (Ref # 92022A)	92022-1481	1
SPRING,KICK PEDAL (Ref # 92081)	92081-020	1
SPRING,RATCHET (Ref # 92081A)	92081-122	1
SPRING,KICKSTARTER (Ref # 92081B)	92081-1907	1
BOLT-FLANGED-SMALL (Ref # 132)	132G0616	2
CIRCLIP-TYPE-C,12MM (Ref # 480)	480J1200	1
CIRCLIP-TYPE-C,15MM (Ref # 480A)	480J1500	1
CIRCLIP-TYPE-E,8MM (Ref # 482)	482K8000	1
BALL-STEEL,1/4" (Ref # 600)	600A0800	1
O RING,4MM (Ref # 670)	670B1504	1

© 2026 Kawasaki Motors Corp., U.S.A.