1989 Big Wheel

PARTS DIAGRAM

Brake Pedal

F2260-0192



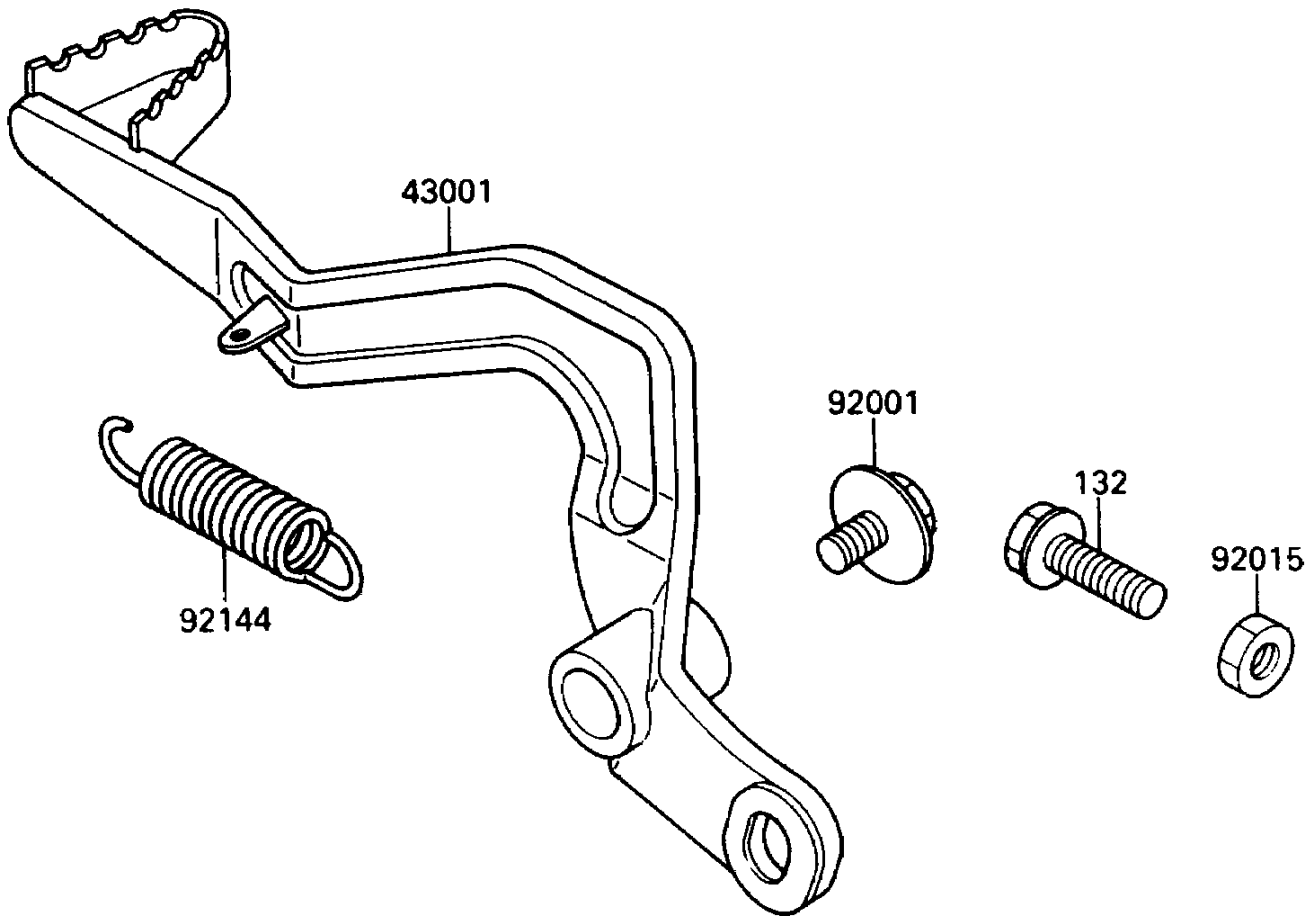

© 2026 Kawasaki Motors Corp., U.S.A.

1989 Big Wheel

PARTS LIST

Brake Pedal

ITEM NAME	PART NUMBER	QUANTITY
LEVER-BRAKE,PEDAL (Ref # 43001)	43001-1232	1
BOLT,FLANGED,6X10 (Ref # 92001)	92001-1034	1
NUT,6MM (Ref # 92015)	92015-1391	1
SPRING,BRAKE PEDAL RETURN (Ref # 92144)	92144-1047	1
BOLT-FLANGED-SMALL (Ref # 132)	132G0620	1

© 2026 Kawasaki Motors Corp., U.S.A.