2022 Z900 SE

PARTS DIAGRAM

Accessory(USB Socket)

F2910B

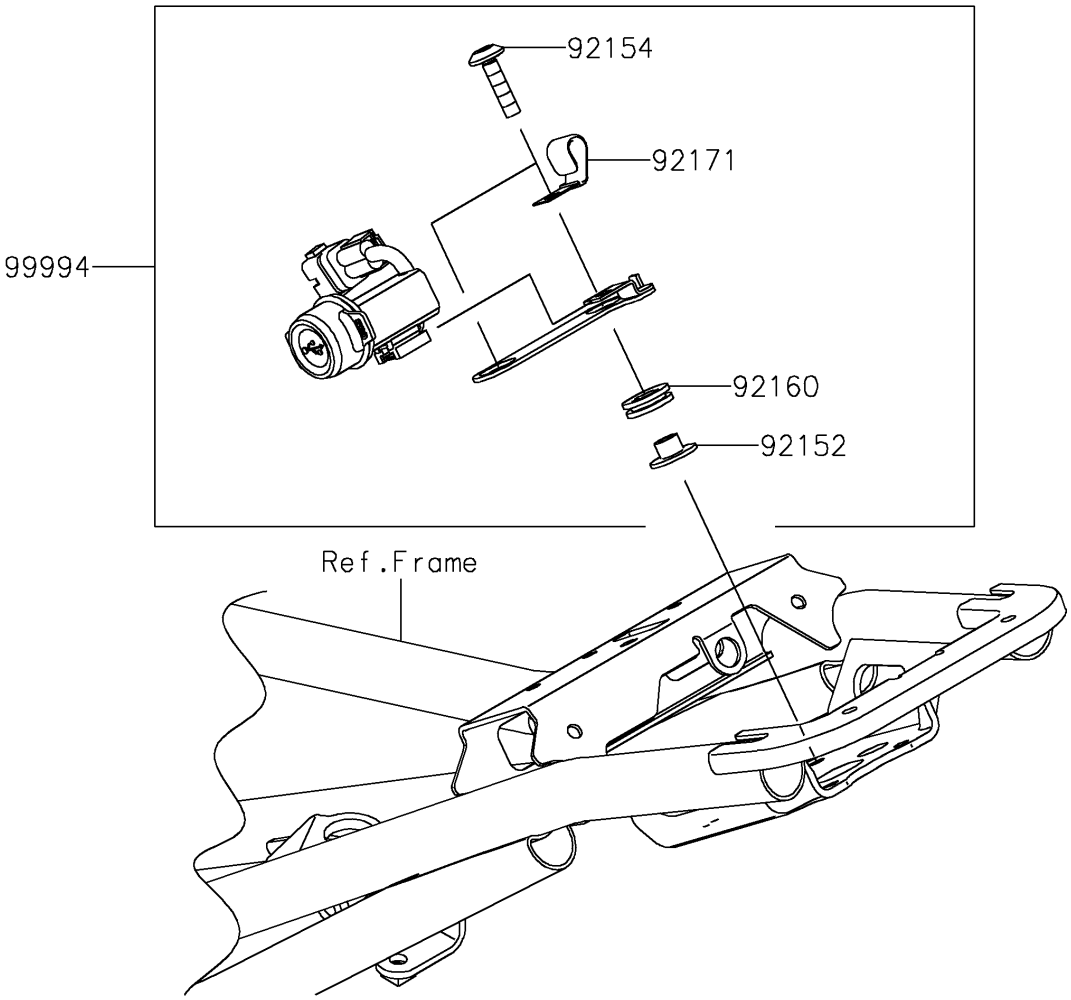

© 2026 Kawasaki Motors Corp., U.S.A.

2022 Z900 SE

PARTS LIST

Accessory(USB Socket)

ITEM NAME	PART NUMBER	QUANTITY

© 2026 Kawasaki Motors Corp., U.S.A.