2022 Z650RS ABS

PARTS DIAGRAM

Side Covers/Chain Cover

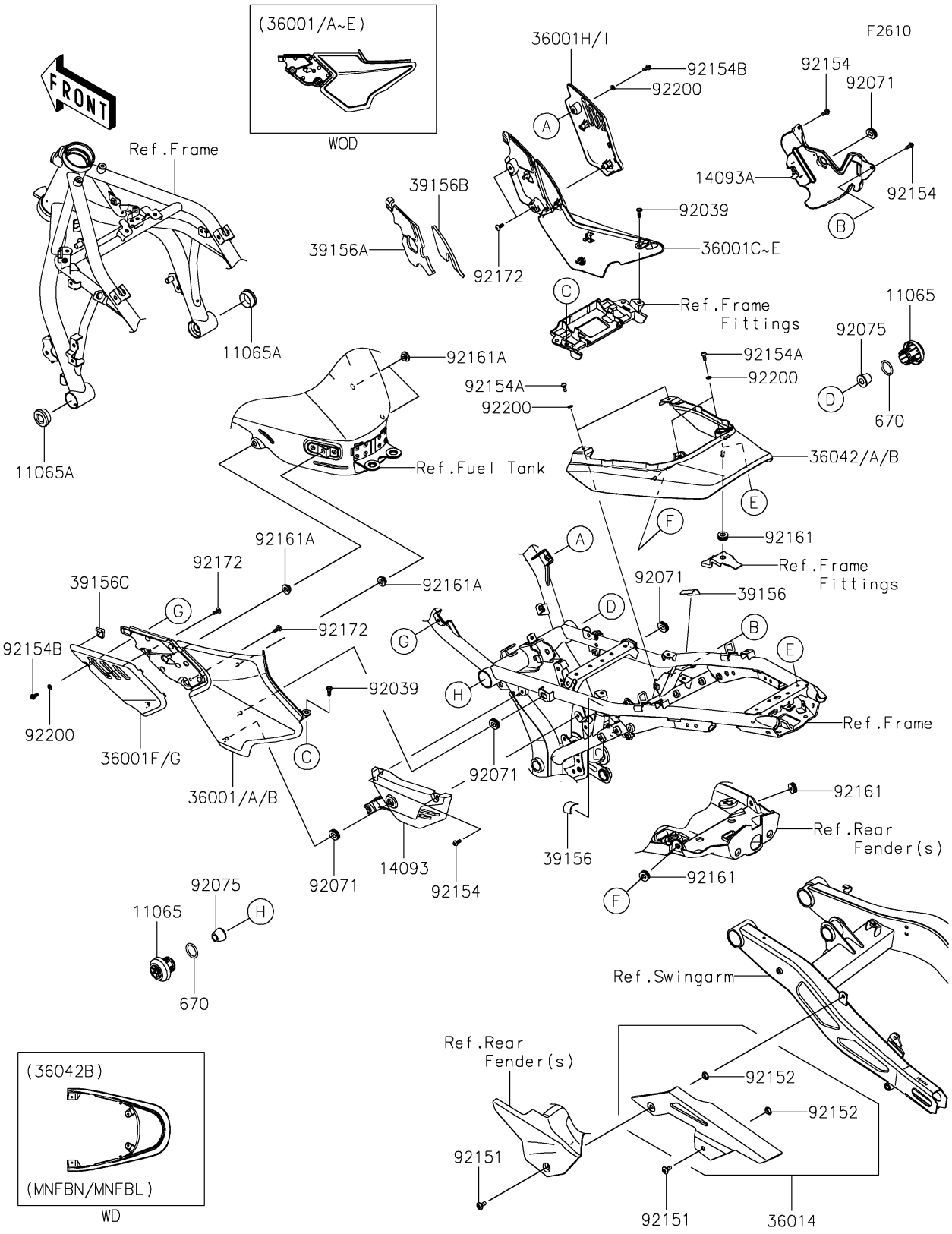

© 2026 Kawasaki Motors Corp., U.S.A.

2022 Z650RS ABS

PARTS LIST

Side Covers/Chain Cover

ITEM NAME	PART NUMBER	QUANTITY

© 2026 Kawasaki Motors Corp., U.S.A.