2004 KX65

PARTS DIAGRAM

Handlebar

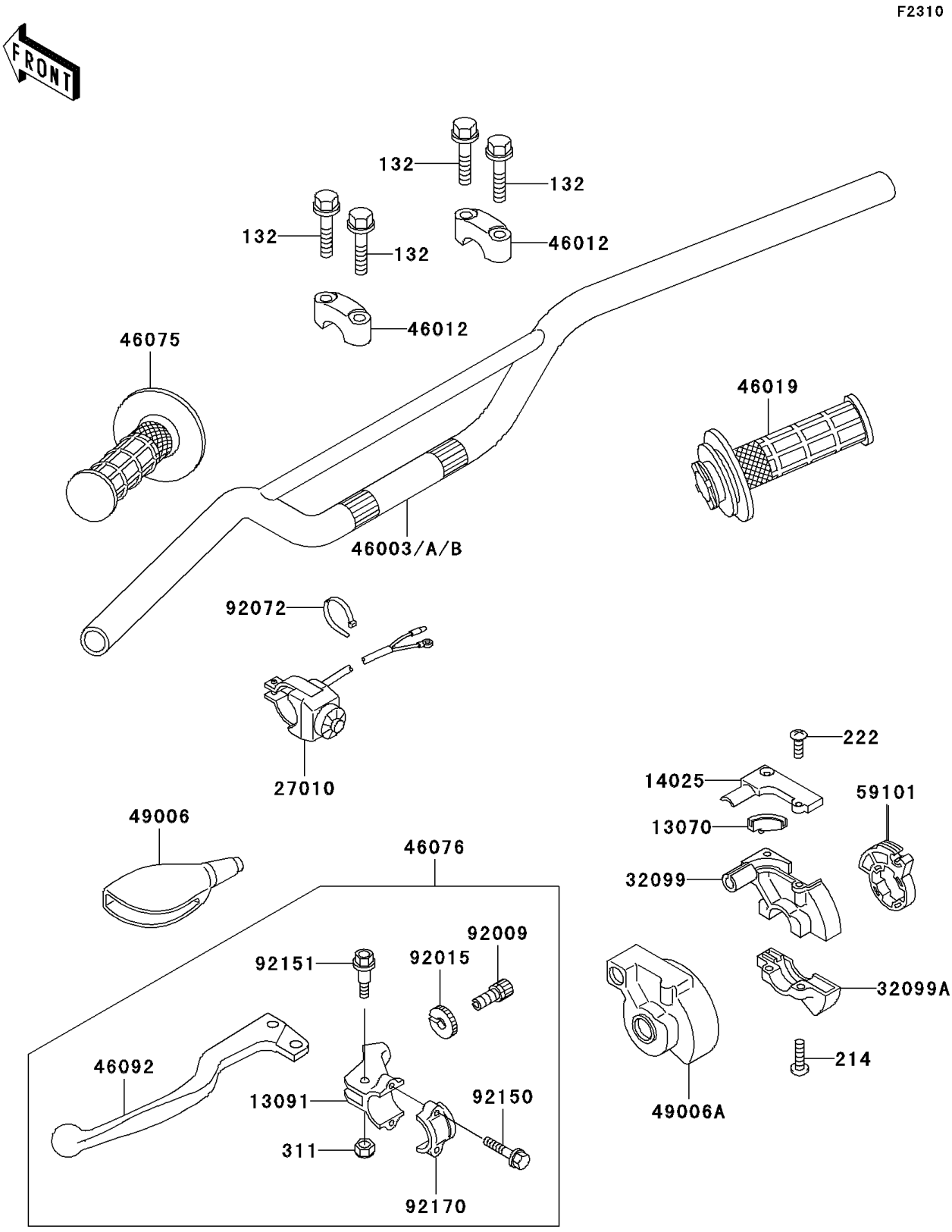

© 2026 Kawasaki Motors Corp., U.S.A.

2004 KX65

PARTS LIST

Handlebar

ITEM NAME	PART NUMBER	QUANTITY
BOLT-FLANGED-SMALL (Ref # 132)	132G0830	4
SCREW-PAN+- (Ref # 214)	214C0518	2
SCREW-CSK-RD-CROS (Ref # 222)	222E0412	2
NUT-HEX (Ref # 311)	311B0500	1
GUIDE,THROTTLE (Ref # 13070)	13070-1074	1
HOLDER,CLUTCH LEVER (Ref # 13091)	13091-1728	1
COVER,THROTTLE CASE UPP (Ref # 14025)	14025-1646	1
SWITCH,ENGINE STOP (Ref # 27010)	27010-1415	1
CASE,THROTTLE UPP (Ref # 32099)	32099-1036	1
CASE,THROTTLE LWR (Ref # 32099A)	32099-1044	1
HANDLE,SILVER (Ref # 46003B)	46003-1577-CE	1
HOLDER-HANDLE,UPP (Ref # 46012)	46012-1191	2
GRIP-ASSY,THROTTLE (Ref # 46019)	46019-1054	1
GRIP,LH (Ref # 46075)	46075-1024	1
LEVER-ASSY-GRIP,CLUTCH (Ref # 46076)	46076-1202	1
LEVER-GRIP,CLUTCH (Ref # 46092)	46092-1165	1
BOOT,LEVER HOLDER (Ref # 49006)	49006-1017	1
BOOT,THROTTLE CASE (Ref # 49006A)	49006-1097	1
REEL,THROTTLE (Ref # 59101)	59101-1110	1
SCREW,CABLE ADJUST,8MM (Ref # 92009)	92009-1435	1
NUT,CABLE ADJUST LOCK,8MM (Ref # 92015)	92015-1596	1
BAND,L=123 (Ref # 92072)	92072-030	1
BOLT (Ref # 92150)	92150-1474	2
BOLT,LEVER SET,5MM (Ref # 92151)	92151-1103	1
CLAMP,LEVER HOLDER (Ref # 92170)	92170-1226	1

© 2026 Kawasaki Motors Corp., U.S.A.