2001 KX65

PARTS DIAGRAM

Crankcase

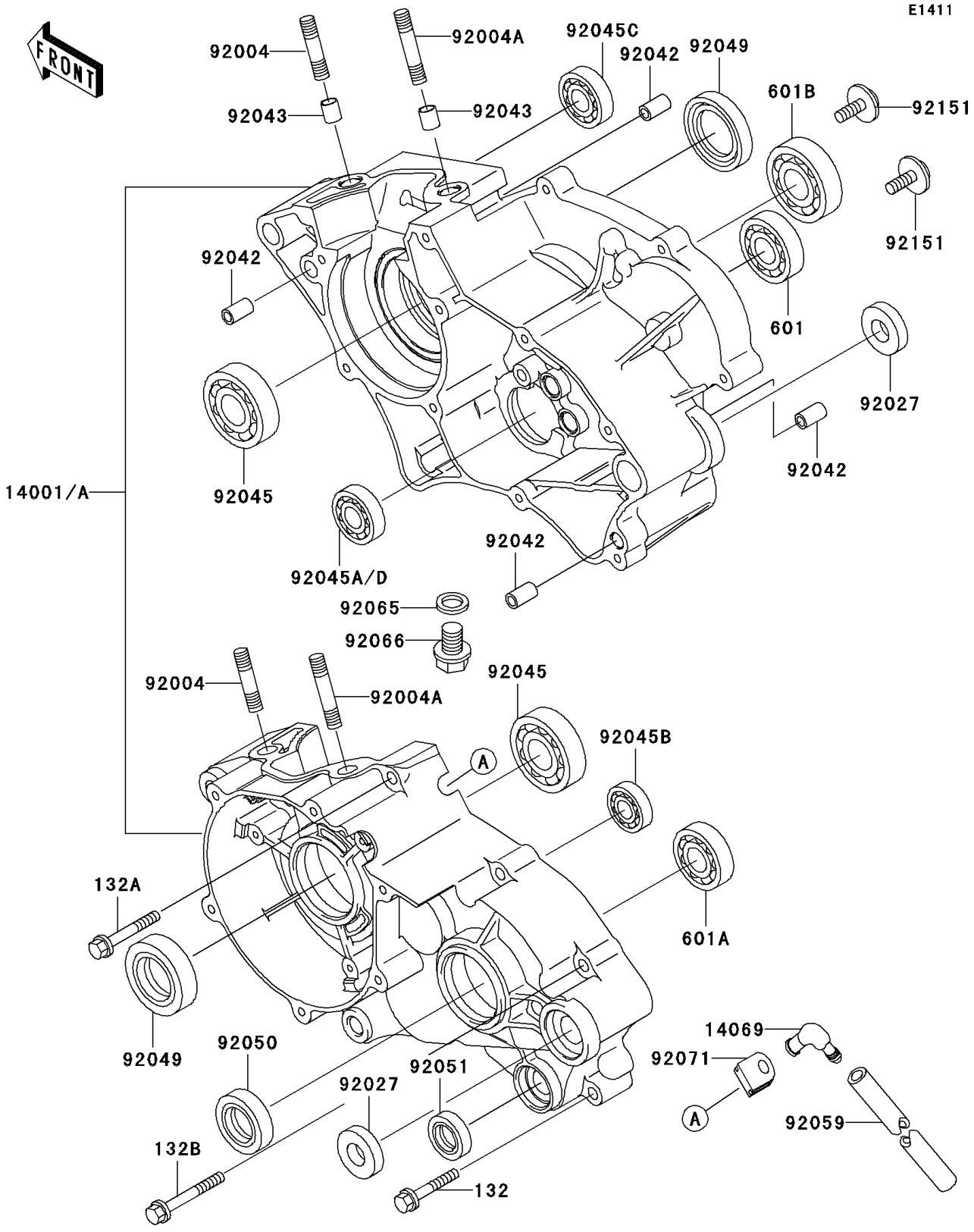

© 2026 Kawasaki Motors Corp., U.S.A.

2001 KX65

PARTS LIST

Crankcase

ITEM NAME	PART NUMBER	QUANTITY
BOLT-FLANGED-SMALL (Ref # 132)	132G0635	3
BOLT-FLANGED-SMALL (Ref # 132A)	132G0640	5
BOLT-FLANGED-SMALL (Ref # 132B)	132G0655	1
BEARING-BALL,#6002 (Ref # 601)	601A6002	1
BEARING-BALL,#6004 (Ref # 601A)	601A6004	1
BEARING-BALL,#6203 (Ref # 601B)	601A6203	1
SET-CRANKCASE (Ref # 14001)	14001-1284	1
BREATHER,CRANKCASE (Ref # 14069)	14069-002	1
STUD,8X28.5 (Ref # 92004)	92004-1245	2
STUD,8X37 (Ref # 92004A)	92004-1246	2
COLLAR,12.1X26X6 (Ref # 92027)	92027-1744	2
PIN,DOWEL,6.3X8X14 (Ref # 92042)	92042-007	4
PIN,8.2X10X14 (Ref # 92043)	92043-1264	2
BEARING-BALL,R-6304C3 (Ref # 92045)	92045-1059	2
BEARING-BALL,6805 (Ref # 92045A)	92045-1122	1
BEARING-BALL,6001C3ML01 (Ref # 92045B)	92045-1235	1
BEARING-BALL,626MC3 (Ref # 92045C)	92045-1304	1
SEAL-OIL,SD20407GS (Ref # 92049)	92049-1188	2
SEAL-OIL,SC25376 (Ref # 92050)	92050-013	1
SEAL-OIL,TB13225.5 (Ref # 92051)	92051-005	1
TUBE,6X9X280 (Ref # 92059)	92059-1074	1
GASKET,10.5X16X1 (Ref # 92065)	92065-058	1
PLUG,DRAIN (Ref # 92066)	92066-1437	1
GROMMET,BREATHER (Ref # 92071)	92071-042	1
BOLT,6X16 (Ref # 92151)	92151-1762	2

© 2026 Kawasaki Motors Corp., U.S.A.