2001 KX65

PARTS DIAGRAM

Clutch

Kawasaki
Let the Good Times Roll®

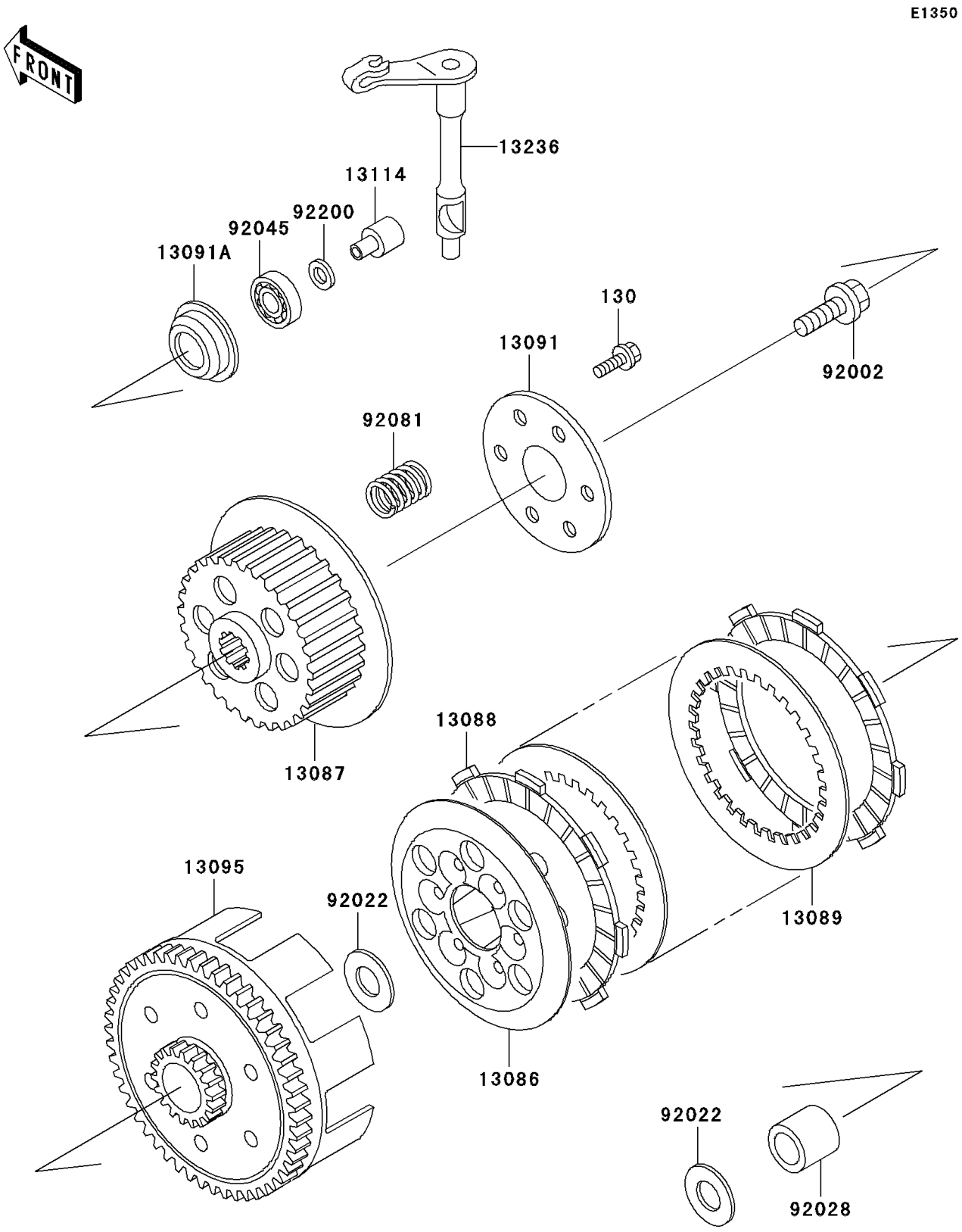

© 2026 Kawasaki Motors Corp., U.S.A.

2001 KX65

PARTS LIST

Clutch

ITEM NAME	PART NUMBER	QUANTITY
BOLT-FLANGED (Ref # 130)	130P0520	6
WHEEL-CLUTCH (Ref # 13086)	13086-1002	1
HUB-CLUTCH (Ref # 13087)	13087-1051	1
PLATE-FRICTION (Ref # 13088)	13088-1010	5
PLATE-CLUTCH (Ref # 13089)	13089-1087	4
HOLDER,CLUTCH SPRING (Ref # 13091)	13091-1115	1
HOLDER,CLUTCH PUSHER (Ref # 13091A)	13091-1133	1
HOUSING-COMP-CLUTCH (Ref # 13095)	13095-1042	1
PUSHER-CLUTCH (Ref # 13114)	13114-1055	1
LEVER-COMP,RELEASE (Ref # 13236)	13236-1338	1
BOLT,10X30 (Ref # 92002)	92002-1697	1
WASHER,17.3X28X1 (Ref # 92022)	92022-255	2
BUSHING (Ref # 92028)	92028-1967	1
BEARING-BALL,627 (Ref # 92045)	92045-1236	1
SPRING,CLUTCH (Ref # 92081)	92081-1175	6
WASHER,7X12.5X0.8 (Ref # 92200)	92200-1197	1

© 2026 Kawasaki Motors Corp., U.S.A.