2021 VULCAN® S ABS CAFE

PARTS DIAGRAM

Stand(s)

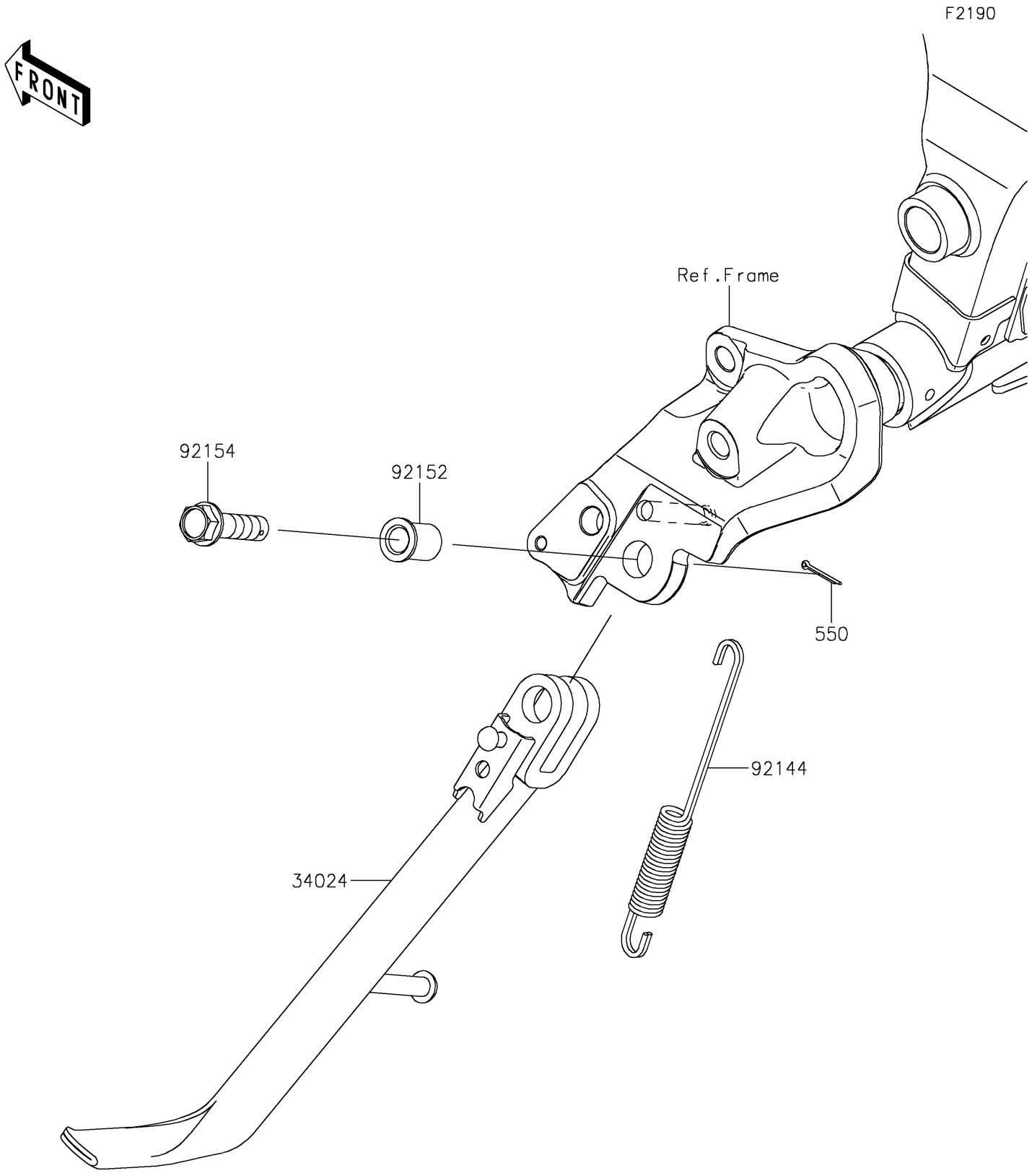

© 2026 Kawasaki Motors Corp., U.S.A.

2021 VULCAN® S ABS CAFE

PARTS LIST

Stand(s)

ITEM NAME	PART NUMBER	QUANTITY

© 2026 Kawasaki Motors Corp., U.S.A.