2021 Vulcan® S ABS CAFE

PARTS DIAGRAM

Crankcase Bolt Pattern

E1412

(Upper Case)

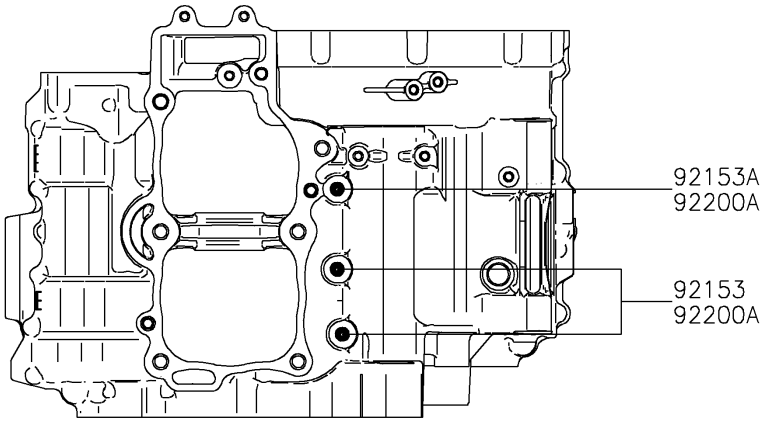

(Lower Case)

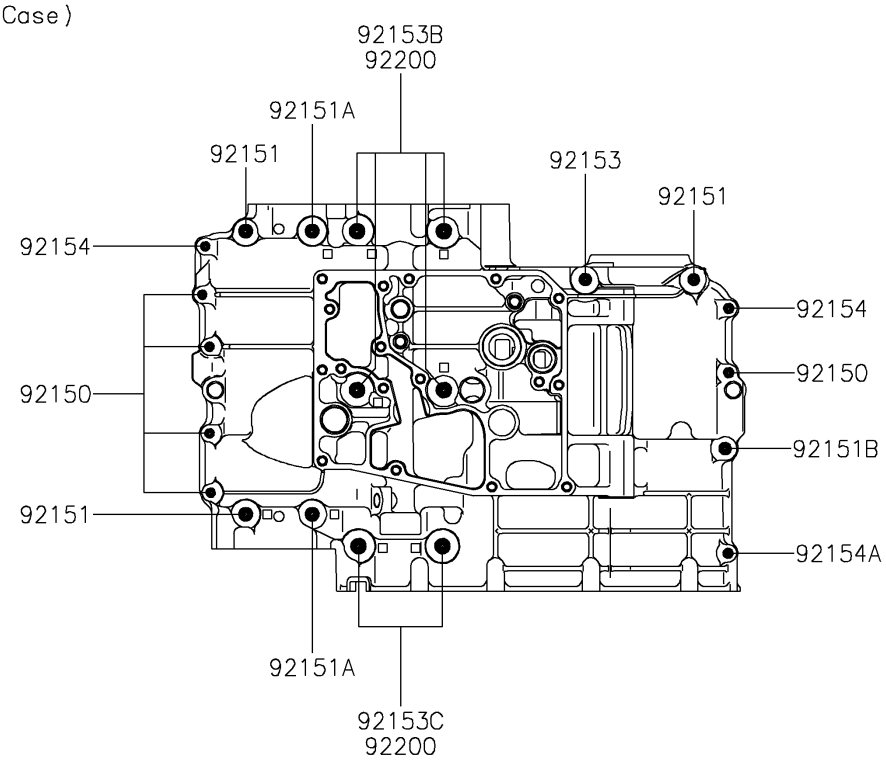

© 2026 Kawasaki Motors Corp., U.S.A.

2021 Vulcan® S ABS CAFE

PARTS LIST

Crankcase Bolt Pattern

ITEM NAME	PART NUMBER	QUANTITY

© 2026 Kawasaki Motors Corp., U.S.A.