# 2022 VULCAN® S CAFE

## PARTS DIAGRAM

### Cylinder Head Cover

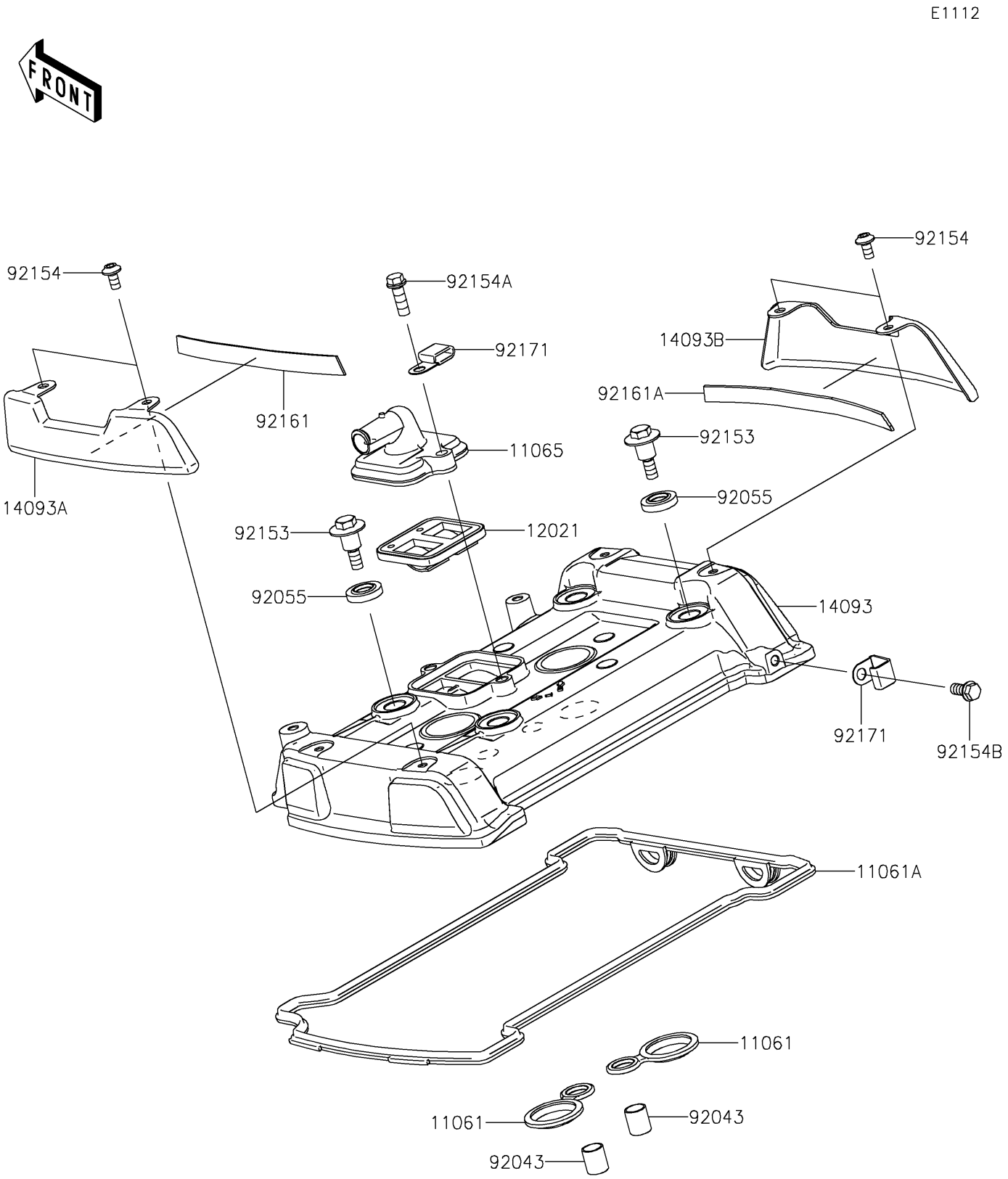


© 2026 Kawasaki Motors Corp., U.S.A.

# 2022 VULCAN® S CAFE

## PARTS LIST

### Cylinder Head Cover

| ITEM NAME | PART NUMBER | QUANTITY |
|---|---|---|
| GASKET,SPARK PLUG HOLE (Ref # 11061) | 11061-0105 | 2 |
| GASKET,HEAD COVER (Ref # 11061A) | 11061-0926 | 1 |
| CAP (Ref # 11065) | 11065-1320 | 1 |
| VALVE-ASSY-REED (Ref # 12021) | 12021-0708 | 1 |
| COVER,HEAD (Ref # 14093) | 14093-0053 | 1 |
| COVER,DRESS,LH (Ref # 14093A) | 14093-0361 | 1 |
| COVER,DRESS,RH (Ref # 14093B) | 14093-0362 | 1 |
| PIN,10.1X12X14 (Ref # 92043) | 92043-4009 | 2 |
| RING-O,HEAD COVER BOLT (Ref # 92055) | 92055-0195 | 4 |
| BOLT,HEAD COVER (Ref # 92153) | 92153-0793 | 4 |
| BOLT,SOCKET,5X10 (Ref # 92154) | 92154-1691 | 4 |
| BOLT,FLANGED,6X18 (Ref # 92154A) | 92154-1775 | 2 |
| BOLT,FLANGED,6X12 (Ref # 92154B) | 92154-1776 | 1 |
| DAMPER,DRESS COVER,LH (Ref # 92161) | 92161-1765 | 1 |
| DAMPER,DRESS COVER,RH (Ref # 92161A) | 92161-1766 | 1 |
| CLAMP (Ref # 92171) | 92171-0813 | 2 |

© 2026 Kawasaki Motors Corp., U.S.A.