2001 KX60

PARTS DIAGRAM

Handlebar

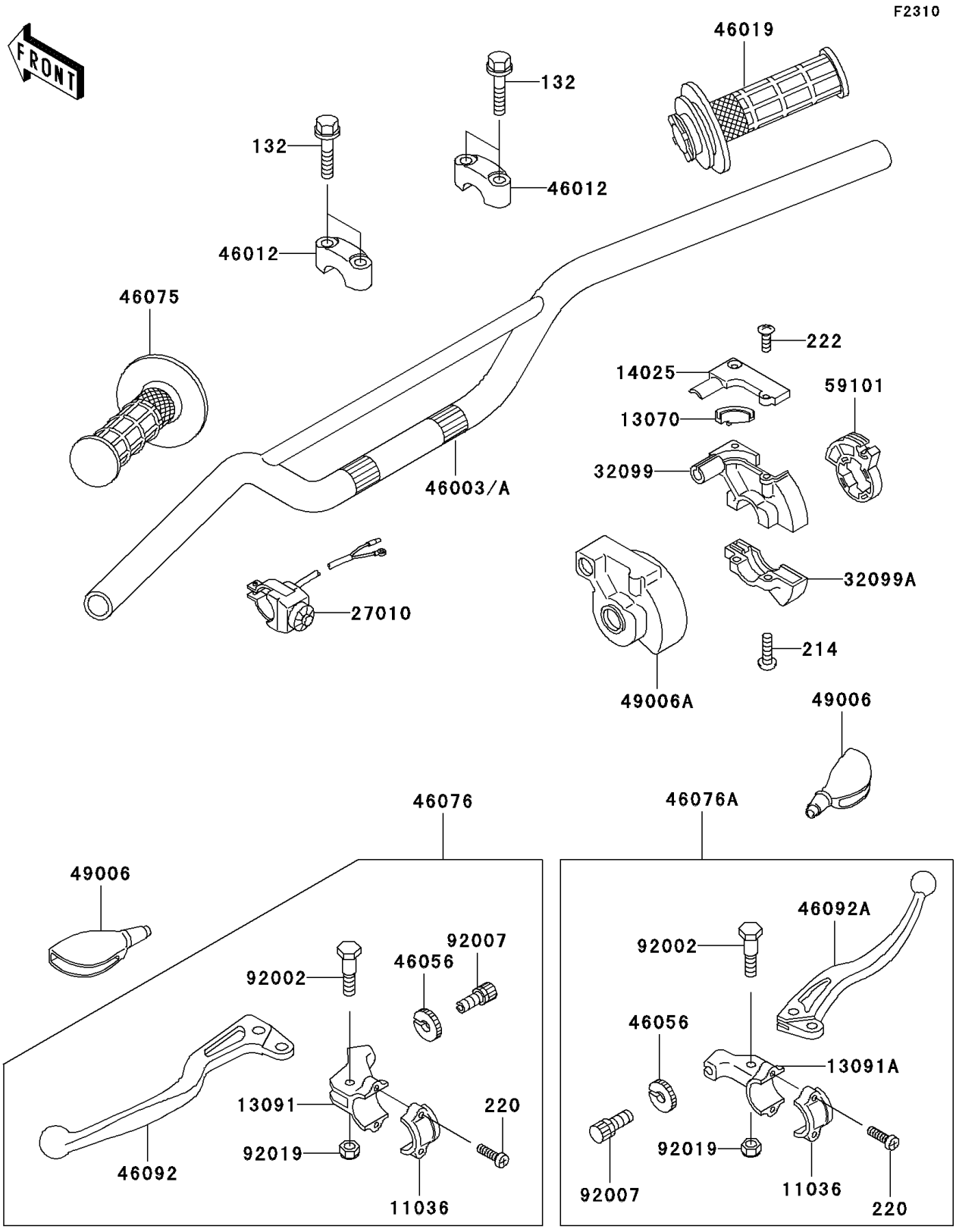

© 2026 Kawasaki Motors Corp., U.S.A.

2001 KX60

PARTS LIST

Handlebar

ITEM NAME	PART NUMBER	QUANTITY
BOLT-FLANGED-SMALL (Ref # 132)	132G0830	4
SCREW-PAN+- (Ref # 214)	214C0518	2
SCREW-PAN-CROS (Ref # 220)	220C0514	4
SCREW-CSK-RD-CROS (Ref # 222)	222E0412	2
BRACKET-A,LEVER HOLDER (Ref # 11036)	11036-1297	2
GUIDE,THROTTLE (Ref # 13070)	13070-1074	1
HOLDER,CLUTCH LEVER (Ref # 13091)	13091-1131	1
HOLDER,BRAKE LEVER (Ref # 13091A)	13091-1135	1
COVER,THROTTLE CASE UPP (Ref # 14025)	14025-1646	1
SWITCH,ENGINE STOP (Ref # 27010)	27010-1350	1
CASE,THROTTLE UPP (Ref # 32099)	32099-1036	1
CASE,THROTTLE LWR (Ref # 32099A)	32099-1044	1
HANDLE (Ref # 46003)	46003-1309	1
HOLDER-HANDLE,UPP (Ref # 46012)	46012-1191	2
GRIP-ASSY,THROTTLE (Ref # 46019)	46019-1054	1
NUT,CABLE ADJUST (Ref # 46056)	46056-006	2
GRIP,LH (Ref # 46075)	46075-1024	1
LEVER-ASSY-GRIP,LH (Ref # 46076)	46076-1106	1
LEVER-ASSY-GRIP,RH (Ref # 46076A)	46076-1107	1
LEVER-GRIP,CLUTCH (Ref # 46092)	46092-1047	1
LEVER-GRIP,BRAKE (Ref # 46092A)	46092-1048	1
BOOT,LEVER HOLDER (Ref # 49006)	49006-1017	2
BOOT,THROTTLE CASE (Ref # 49006A)	49006-1097	1
REEL,THROTTLE (Ref # 59101)	59101-1110	1
BOLT,LEVER SET (Ref # 92002)	92002-1150	2
SCREW,CABLE ADJUST,7MM (Ref # 92007)	92007-1143	2
NUT,LOCK,6MM (Ref # 92019)	92019-008	2

© 2026 Kawasaki Motors Corp., U.S.A.