2001 KX60

PARTS DIAGRAM

Swingarm

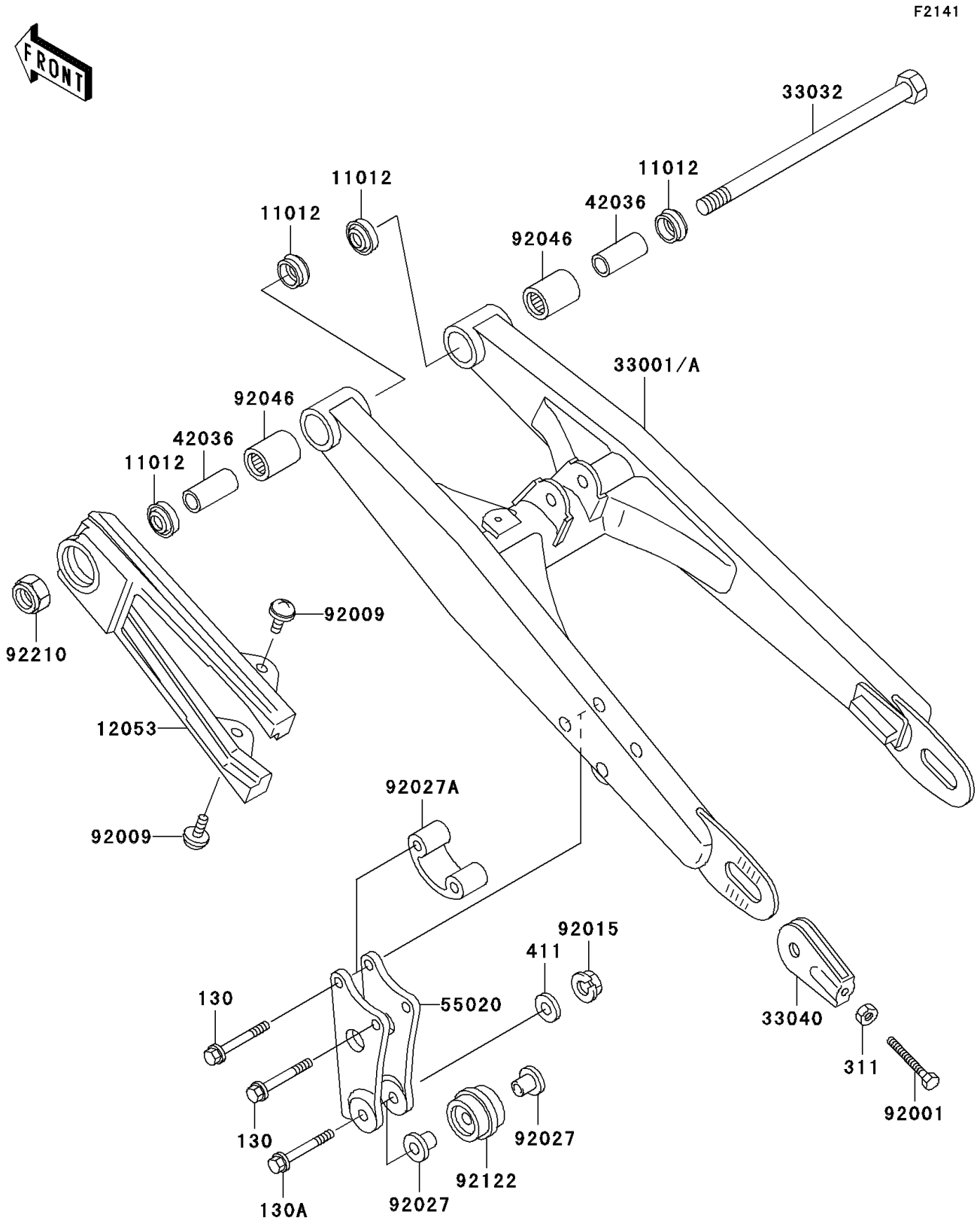

© 2026 Kawasaki Motors Corp., U.S.A.

2001 KX60

PARTS LIST

Swingarm

ITEM NAME	PART NUMBER	QUANTITY
BOLT-FLANGED,6X45 (Ref # 130)	130G0645	2
BOLT-FLANGED,6X50 (Ref # 130A)	130G0650	1
NUT-HEX,6MM (Ref # 311)	311B0600	2
WASHER-PLAIN,6MM (Ref # 411)	411B0600	1
CAP (Ref # 11012)	11012-1263	4
GUIDE-CHAIN,FR (Ref # 12053)	12053-1410	1
ARM-COMP-SWING,SILVER NO.35 (Ref # 33001A)	33001-1307-TX	1
SHAFT-SWING ARM,PIVOT (Ref # 33032)	33032-1031	1
ADJUSTER-CHAIN (Ref # 33040)	33040-1055	2
SLEEVE,SWING ARM,L=34 (Ref # 42036)	42036-1067	2
GUARD,CHAIN,RR (Ref # 55020)	55020-1163	1
BOLT,6X39 (Ref # 92001)	92001-1463	2
SCREW,6X10,WHITE (Ref # 92009)	92009-1286	2
NUT,6MM (Ref # 92015)	92015-1393	1
COLLAR (Ref # 92027)	92027-1183	2
COLLAR,CHAIN GUIDE (Ref # 92027A)	92027-1495	1
BEARING-NEEDLE (Ref # 92046)	92046-1046	2
ROLLER,CHAIN GUIDE (Ref # 92122)	92122-1030	1
NUT,LOCK,12MM (Ref # 92210)	92210-1249	1

© 2026 Kawasaki Motors Corp., U.S.A.