2001 KX60

PARTS DIAGRAM

Generator

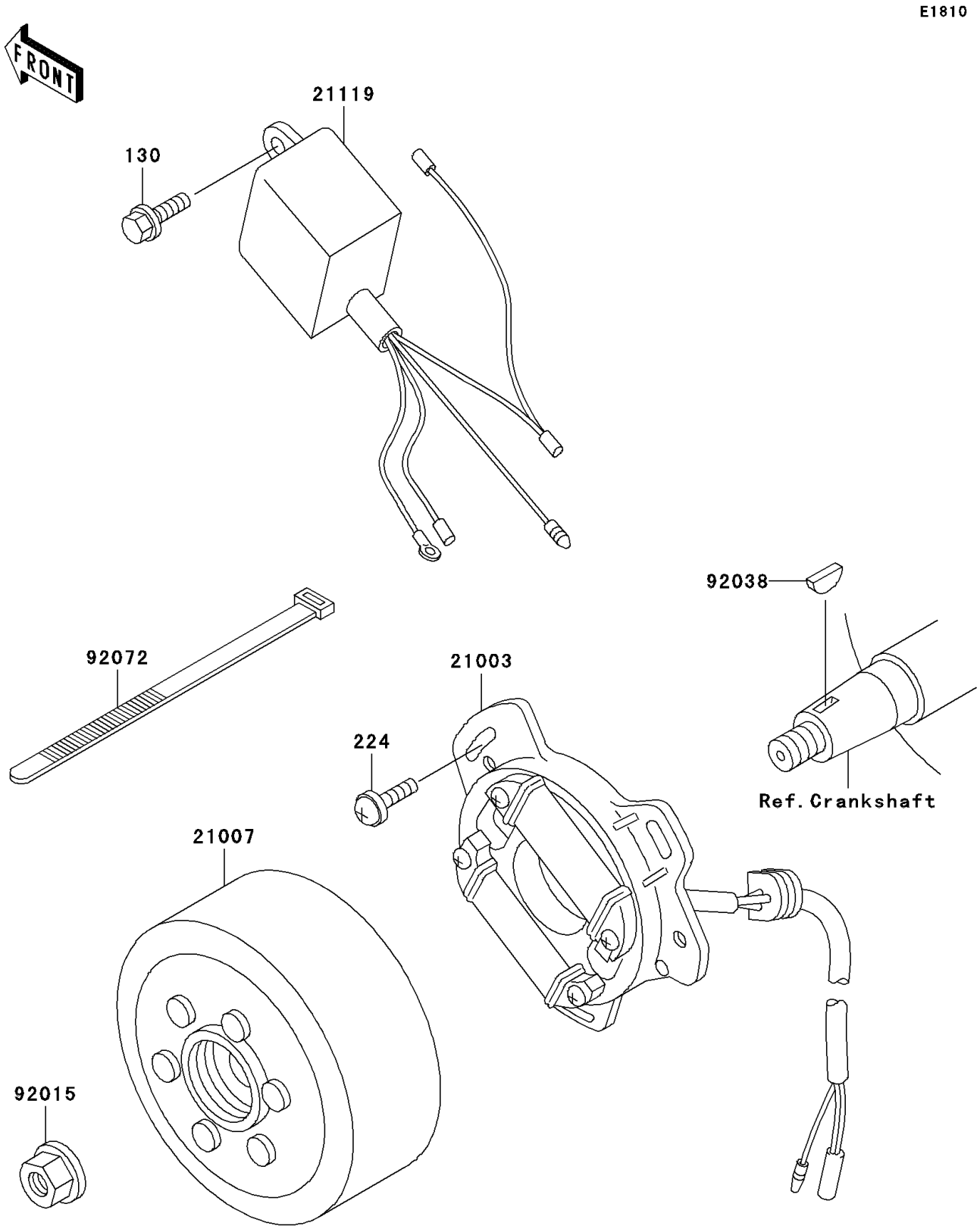

© 2026 Kawasaki Motors Corp., U.S.A.

2001 KX60

PARTS LIST

Generator

ITEM NAME	PART NUMBER	QUANTITY
BOLT-FLANGED,6X16 (Ref # 130)	130G0616	1
SCREW-PAN-WP-CROS (Ref # 224)	224B0514	3
STATOR (Ref # 21003)	21003-1323	1
ROTOR (Ref # 21007)	21007-1316	1
IGNITER (Ref # 21119)	21119-1485	1
NUT,FLANGED,10MM (Ref # 92015)	92015-077	1
KEY,WOODRUFF (Ref # 92038)	92038-001	1
BAND,L=186 (Ref # 92072)	92072-056	1

© 2026 Kawasaki Motors Corp., U.S.A.