2001 KX60

PARTS DIAGRAM

Gear Change Drum/Shift Fork(s)

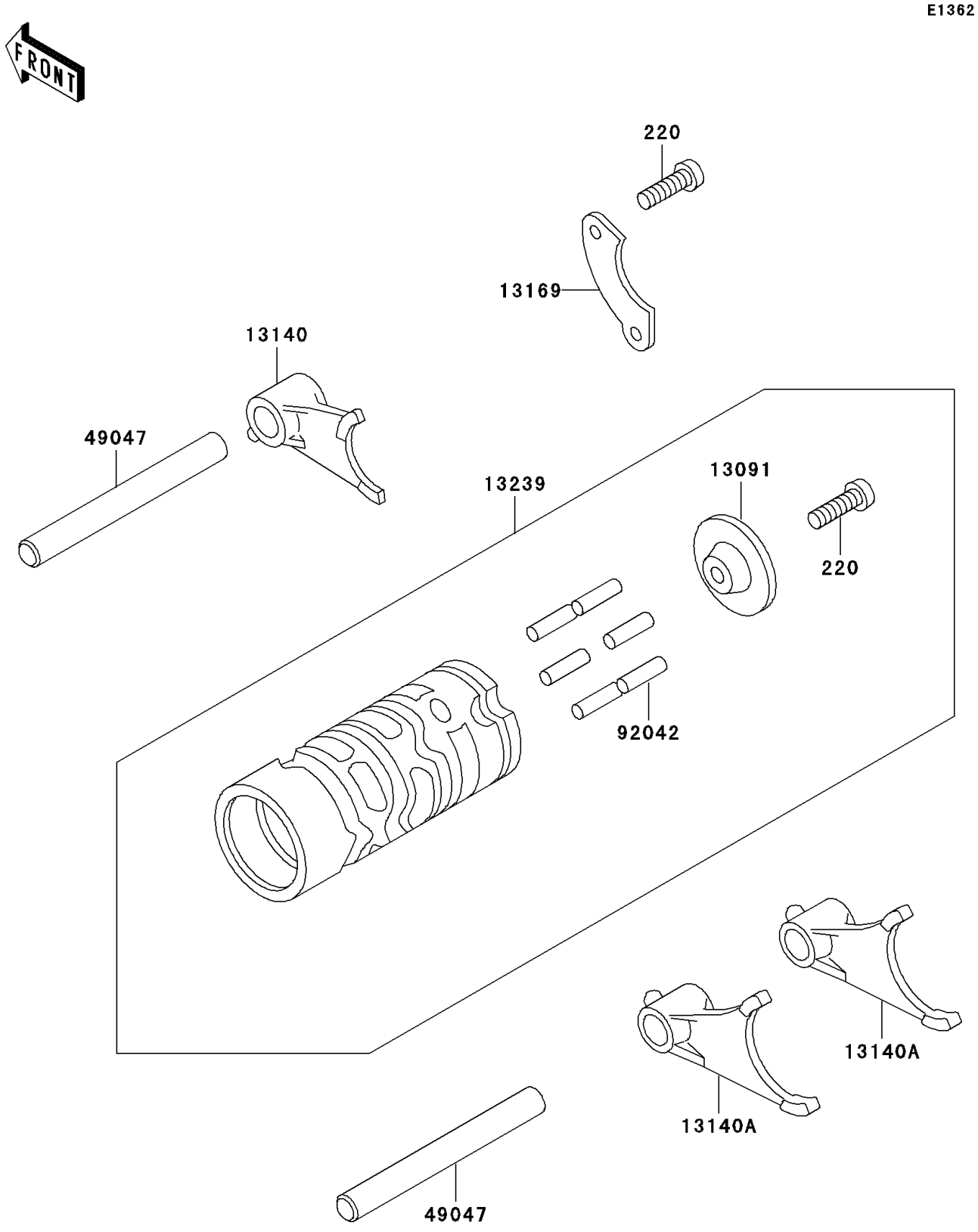

© 2026 Kawasaki Motors Corp., U.S.A.

2001 KX60

PARTS LIST

Gear Change Drum/Shift Fork(s)

ITEM NAME	PART NUMBER	QUANTITY
SCREW-PAN-CROS,6X14 (Ref # 220)	220B0614	2
HOLDER,CHANGE DRUM PIN (Ref # 13091)	13091-1098	1
FORK-SHIFT,INPUT (Ref # 13140)	13140-1300	1
FORK-SHIFT,OUTPUT (Ref # 13140A)	13140-1301	2
PLATE,CHANGE DRUM POSITION (Ref # 13169)	13169-1309	1
DRUM-ASSY-CHANGE (Ref # 13239)	13239-1065	1
ROD-SHIFT,10X90 (Ref # 49047)	49047-1009	2
PIN,DOWEL,4X16.8 (Ref # 92042)	92042-029	6

© 2026 Kawasaki Motors Corp., U.S.A.