2001 KX60

PARTS DIAGRAM

Cylinder Head/Cylinder

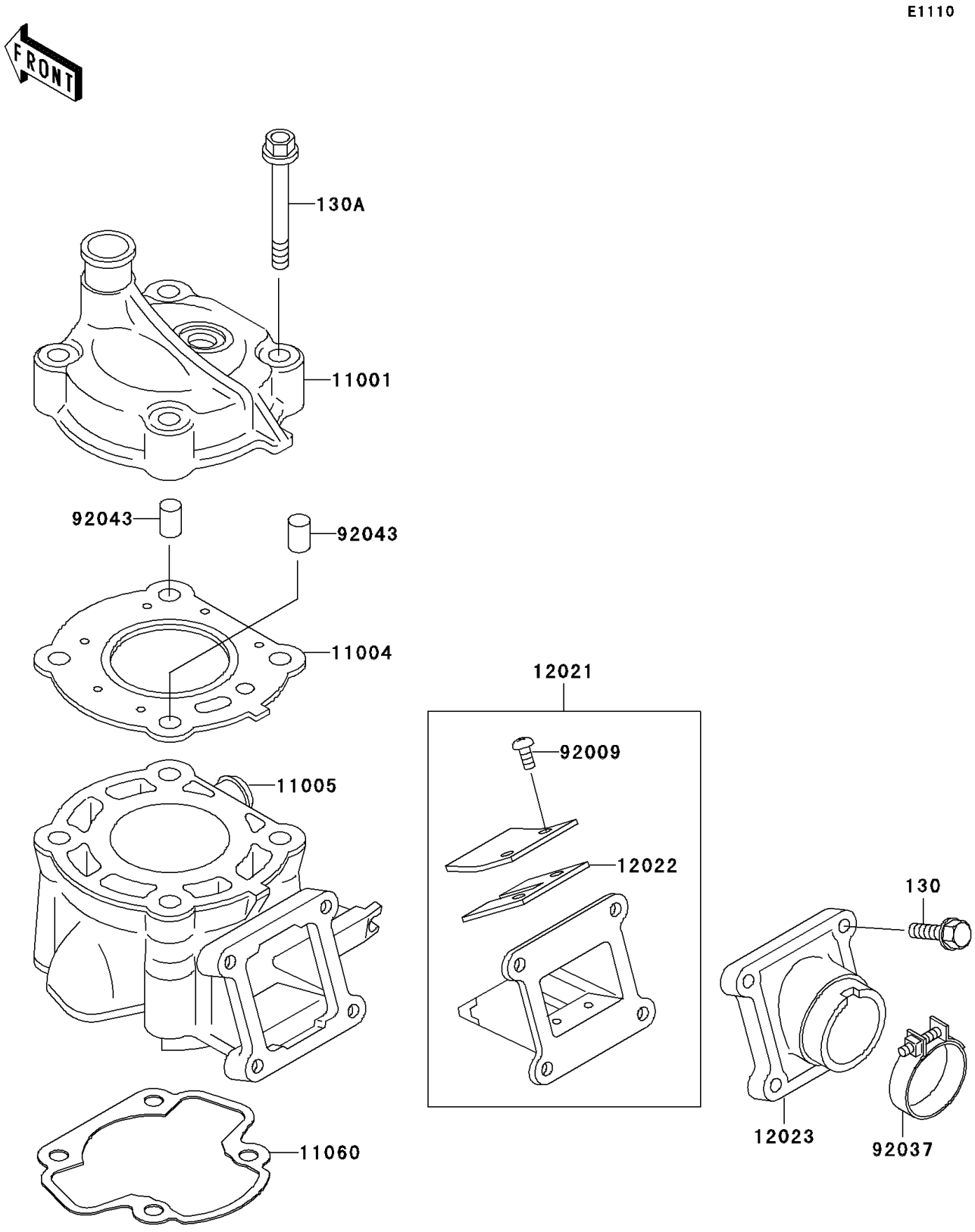

© 2026 Kawasaki Motors Corp., U.S.A.

2001 KX60

PARTS LIST

Cylinder Head/Cylinder

ITEM NAME	PART NUMBER	QUANTITY
BOLT-FLANGED,6X20 (Ref # 130)	130G0620	4
BOLT-FLANGED (Ref # 130A)	130P08105	4
HEAD-CYLINDER (Ref # 11001)	11001-1175	1
GASKET-HEAD (Ref # 11004)	11004-1218	1
CYLINDER-ENGINE (Ref # 11005)	11005-1378	1
GASKET,CYLINDER BASE (Ref # 11060)	11060-1873	1
VALVE-ASSY-REED (Ref # 12021)	12021-1015	1
VALVE-REED,T=0.42 (Ref # 12022)	12022-1013	2
HOLDER-VALVE,REED (Ref # 12023)	12023-1019	1
SCREW,REED VALVE (Ref # 92009)	92009-1014	4
CLAMP (Ref # 92037)	92037-1305	1
PIN,DOWEL,10X14 (Ref # 92043)	92043-1037	2

© 2026 Kawasaki Motors Corp., U.S.A.