1994 KX60

PARTS DIAGRAM

Cables

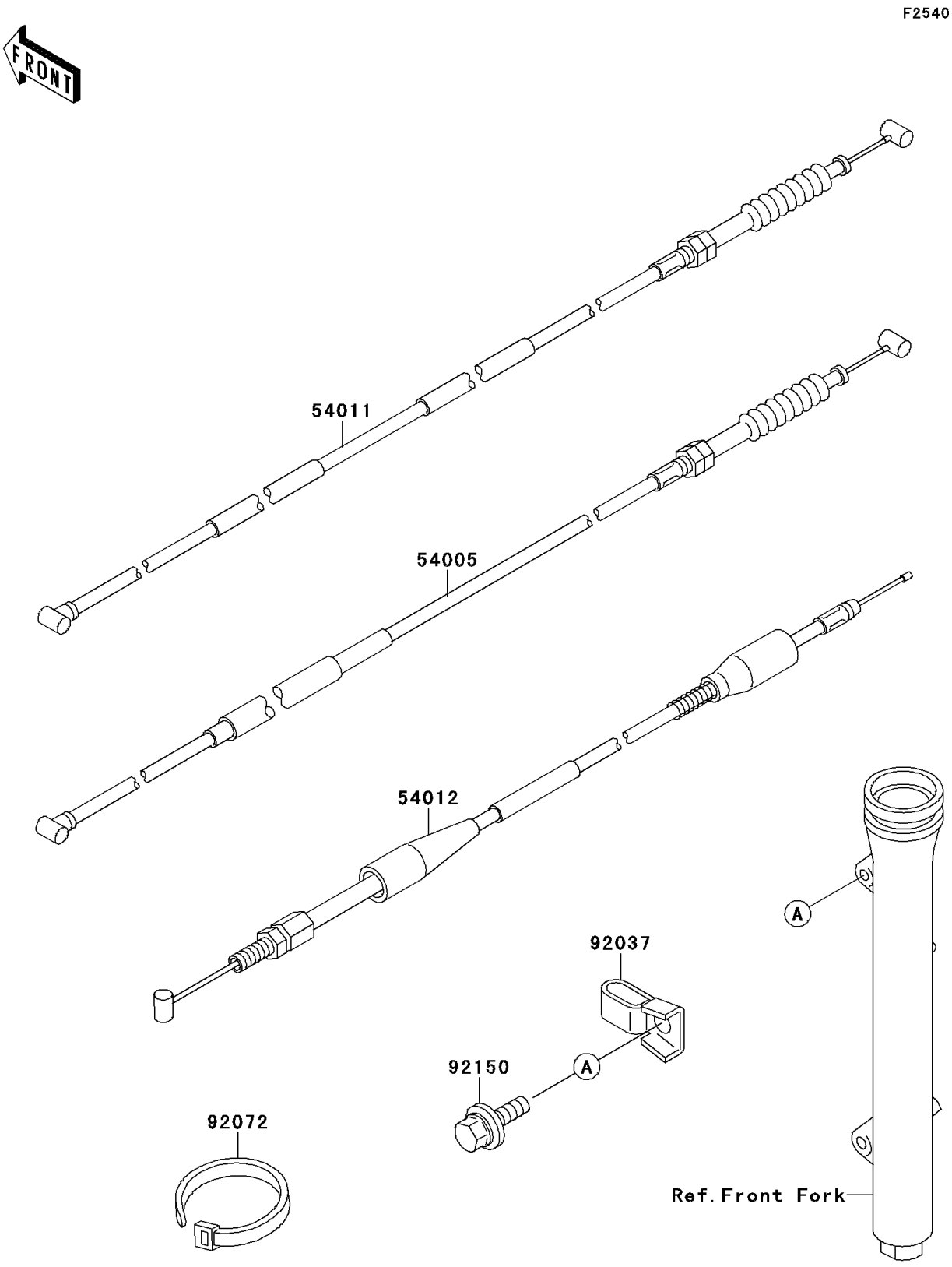

© 2026 Kawasaki Motors Corp., U.S.A.

1994 KX60

PARTS LIST

Cables

ITEM NAME	PART NUMBER	QUANTITY
CABLE-BRAKE (Ref # 54005)	54005-1046	1
CABLE-CLUTCH (Ref # 54011)	54011-1222	1
CABLE-THROTTLE (Ref # 54012)	54012-1333	1
CLAMP,BRAKE CABLE (Ref # 92037)	92037-1353	1
BAND,L=218 (Ref # 92072)	92072-032	1
BOLT,FLANGED,6X16 (Ref # 92150)	92150-1506	1

© 2026 Kawasaki Motors Corp., U.S.A.