1994 KX60

PARTS DIAGRAM

Brake Pedal

F2260

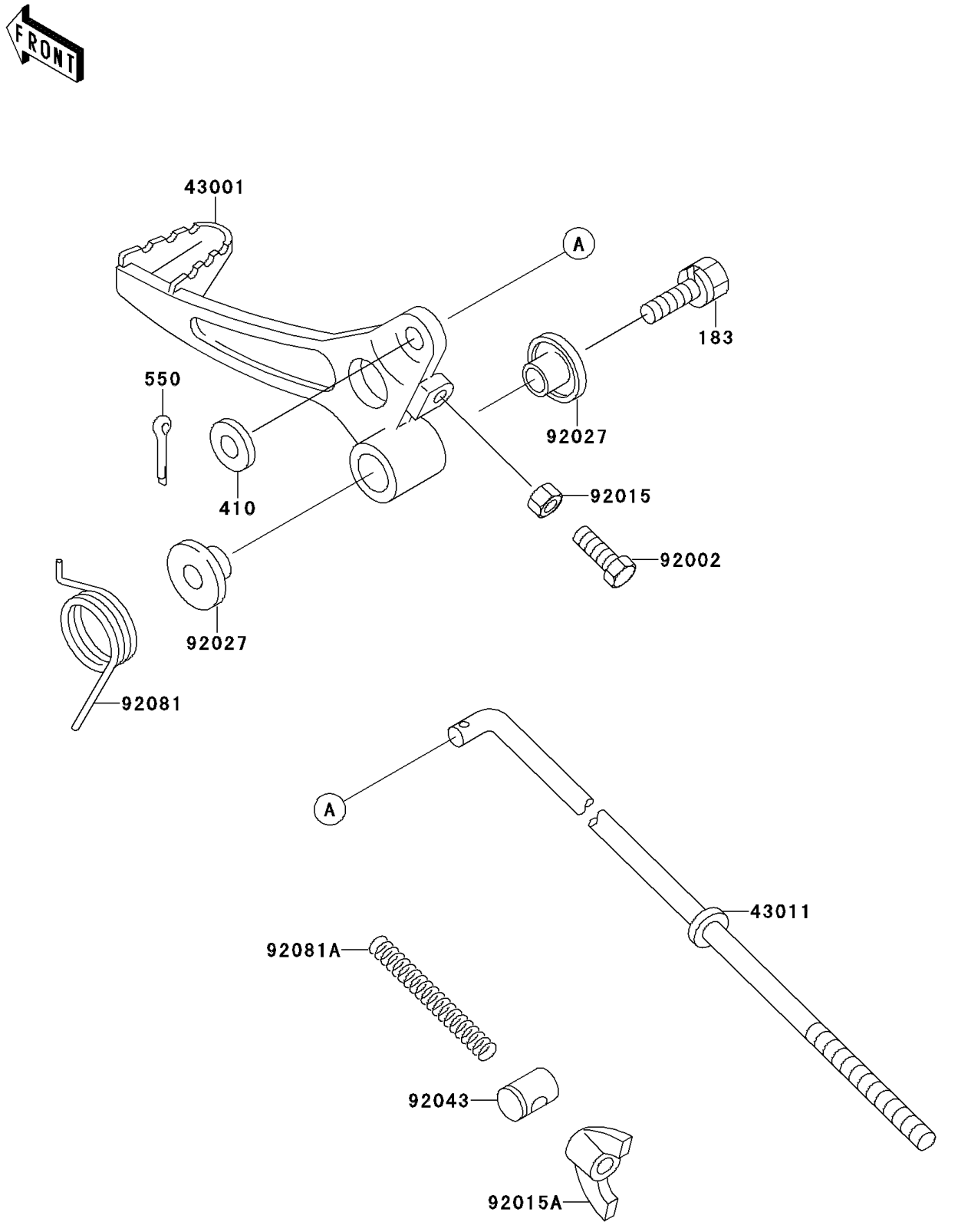

© 2026 Kawasaki Motors Corp., U.S.A.

1994 KX60

PARTS LIST

Brake Pedal

ITEM NAME	PART NUMBER	QUANTITY
BOLT-UPSET-WS-SMALL (Ref # 183)	183G0840	1
WASHER-PLAIN-SMALL,6MM (Ref # 410)	410B0600	1
PIN-COTTER,2.0X15 (Ref # 550)	550D2015	1
LEVER-BRAKE,PEDAL (Ref # 43001)	43001-1243	1
ROD-BRAKE (Ref # 43011)	43011-1104	1
BOLT,6X20 (Ref # 92002)	92002-1373	1
NUT,6MM (Ref # 92015)	92015-1391	1
NUT,WING,6MM (Ref # 92015A)	92015-4004	1
COLLAR,BRAKE PEDAL (Ref # 92027)	92027-1497	2
PIN,BRAKE ROD (Ref # 92043)	92043-039	1
SPRING,BRAKE PEDAL (Ref # 92081)	92081-1494	1
SPRING,BRAKE ROD (Ref # 92081A)	92081-1688	1

© 2026 Kawasaki Motors Corp., U.S.A.