2022 Ninja ZX-6R

PARTS DIAGRAM

Owner's Tools

F2810

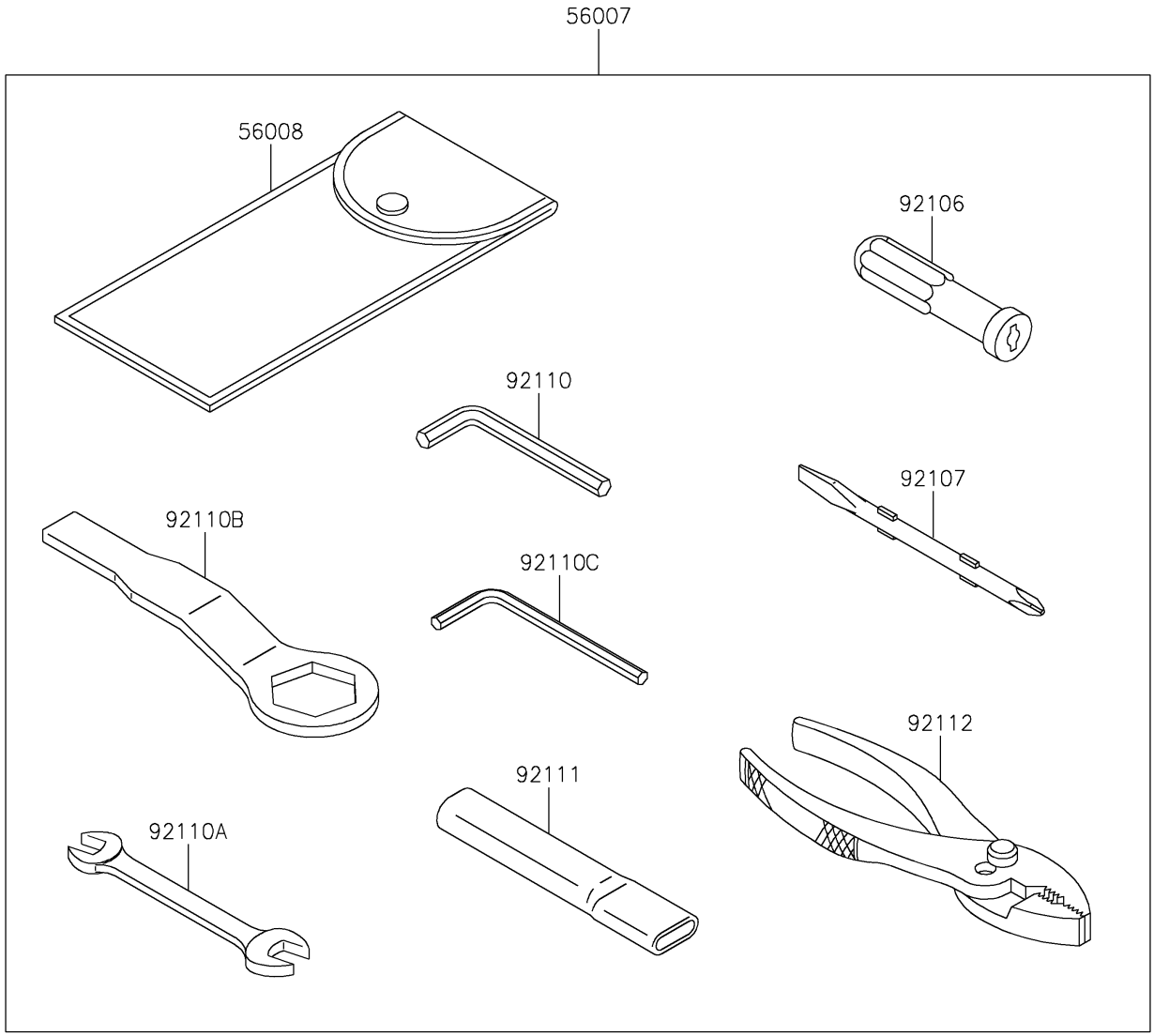

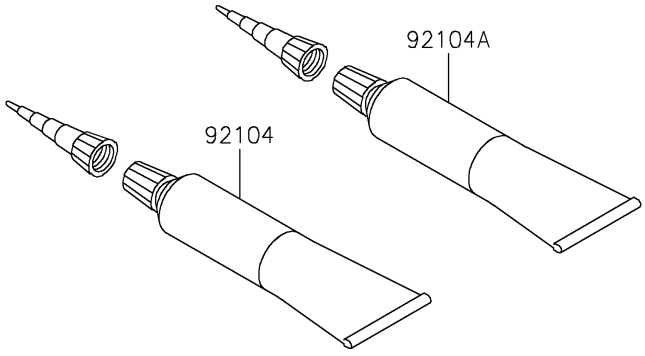

© 2026 Kawasaki Motors Corp., U.S.A.

2022 Ninja ZX-6R

PARTS LIST

Owner's Tools

ITEM NAME	PART NUMBER	QUANTITY
TOOL-KIT (Ref # 56007)	56007-0098	1
BAG,TOOL (Ref # 56008)	56008-1075	1
GASKET-LIQUID,TB1211F,CLEAR (Ref # 92104)	92104-0004	1
GASKET-LIQUID,TB1216B,BLACK (Ref # 92104A)	92104-1064	1
GRIP-SCREW DRIVER (Ref # 92106)	92106-1001	1
TOOL-DRIVER,#2PHILLIPS&SLOT (Ref # 92107)	92107-1051	1
TOOL-WRENCH,ALLEN,5MM (Ref # 92110)	92110-1015	1
TOOL-WRENCH,OPEN END,10X12 (Ref # 92110A)	92110-1152	1
TOOL-WRENCH,BOX END,32MM (Ref # 92110B)	92110-1161	1
TOOL-WRENCH,ALLEN,4MM (Ref # 92110C)	92110-3703	1
TOOL-BAR,BOX END WRENCH (Ref # 92111)	92111-1051	1
TOOL-PLIERS (Ref # 92112)	92112-1001	1

© 2026 Kawasaki Motors Corp., U.S.A.